MINI HYDRAULIC POWER PACKS, type MHS

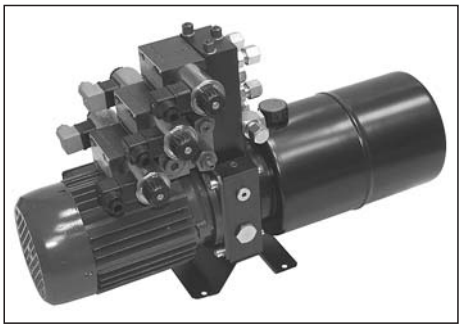

Compact modular design allows wide spectrum of different applications with minimal power pack dimensions. Mini hydraulic power packs are assembled from standard components that are kept on stock. Therefore quick delivery and competitive price is assured.
MHS power packs are suitable for intermittent service in lifting clamping, positioning, pressing and other low cycle applications. For cycling applications consult KLADIVAR.

Ordering code

1 2 3 4 5 6

MHS - - - - - -

- Basic manifold
- Support
- Pump
- Electric motor with flange and coupling
- Oil tank / Mounting position
- Hydraulic controls

Technical data

Mounting position	horizontal, vertical
Fixing	thread 2xM8 or support
Threaded connections	G 3/8
Pump type	gear pump
Pump displacement	0,16 - 7,9 ccm/rev
Working pressure	see page 30.1.2 (3. PUMP)
Fluid type	mineral oil HL, HLP (DIN 51524); for other fluid type consult KLADIVAR
Electric motor	AC or DC
Supply voltage	12V DC, 24 DC, 230V AC, 230/400V AC
Motor power	AC to 3kW, DC to 2kW

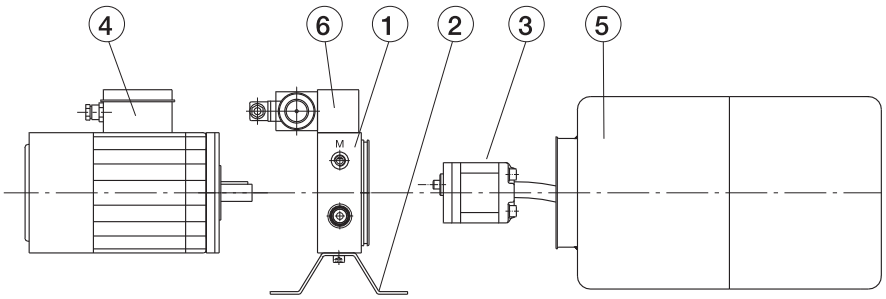

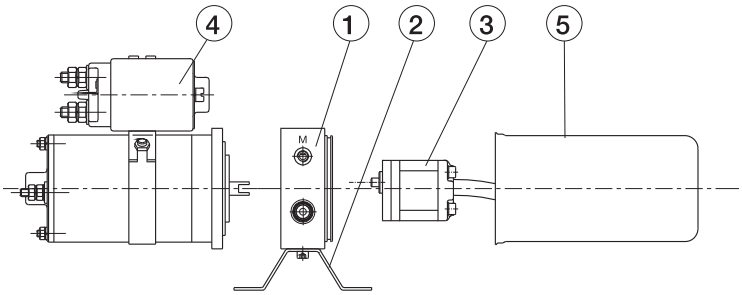

Order specification example:

1 2 3 4 5 6

MHS - K4 - P - 064 - AC3 / 4 / 037 - R8 / H - E01 / VVP130 / NOVB / TSA115 - 24DC / L

1. BASIC MANIFOLD

__/___ → Pressure setting of relief valve (bar)

Code	N1, V1	N2	N3	K4
Symbol	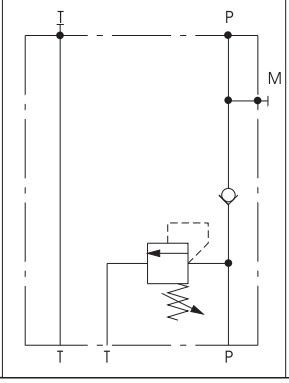	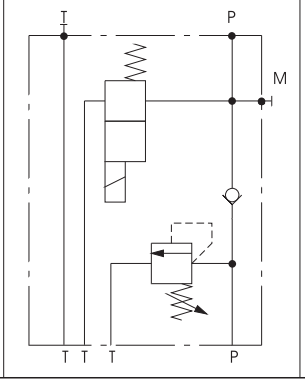	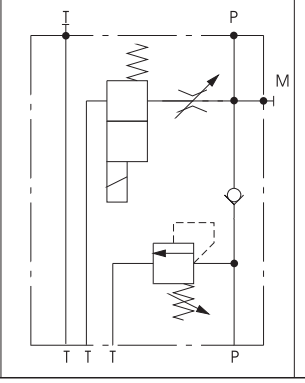	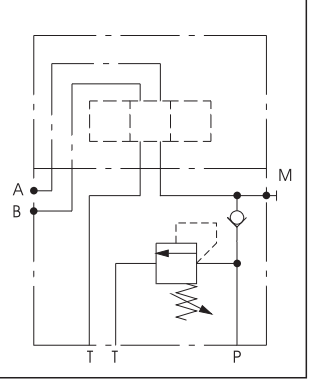

B view for N1, N2, N3 and V1 manifold

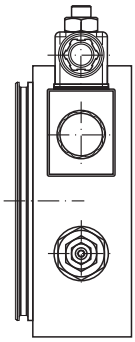

B view for K4 manifold

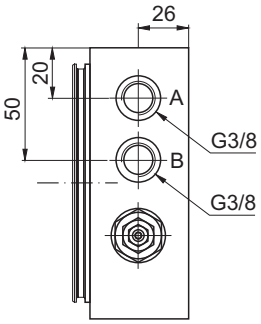

Base view for N1, N2, N3, V1, K4 manifold

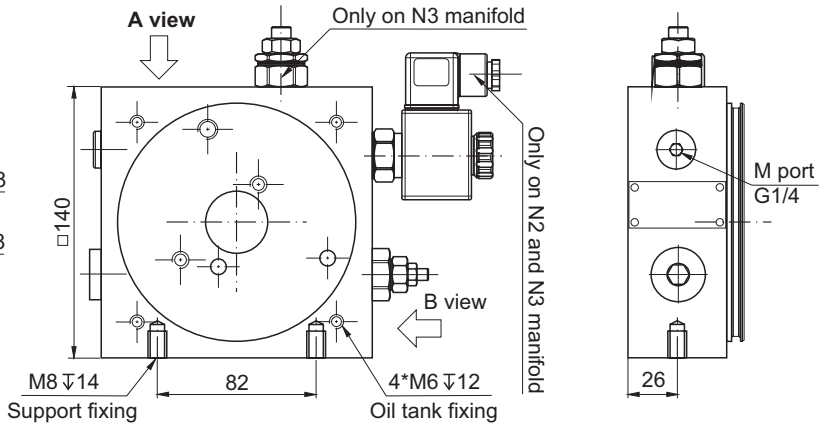

A view for N1, N2, N3 manifold

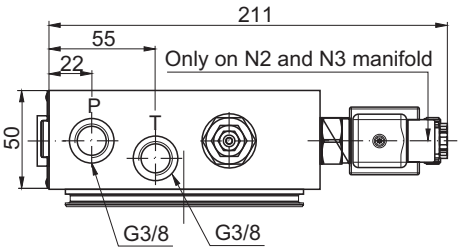

A view for V1 manifold

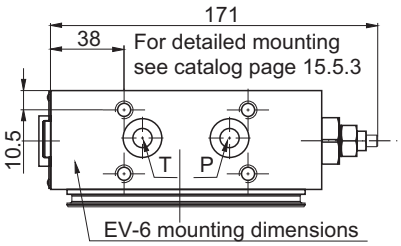

A view for K1 manifold

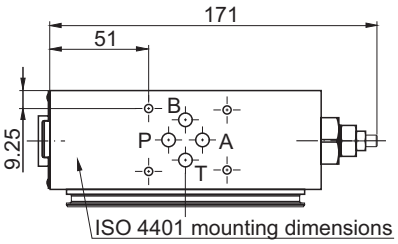

2. SUPPORT

- →

Code	Note	d
P	Support as on drawing	2
R		4
N	Without support	-

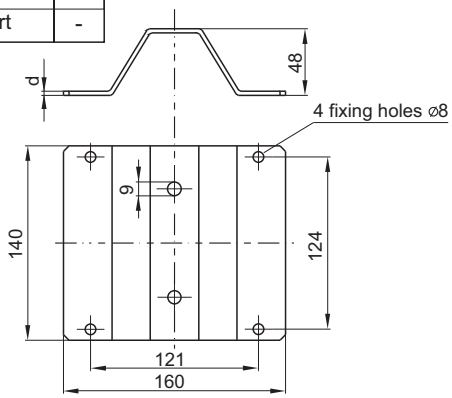

3. PUMP

Note: - Built in 125 µm filter
- Left rotation pump

--- →

Code	Displacement cm³	Max. operating press. (bar)	Max. speed (rpm)
016	0,16	260	9000
024	0,24	260	9000
045	0,45	280	9000
056	0,56	280	9000
075	0,75	280	9000
092	0,92	280	6000
126	1,26	280	6000
148	1,48	280	6000
228	2,28	210	5000
250	2,50	275	4000
330	3,30	275	4000
360	3,60	250	4000
430	4,30	210	3500
480	4,80	160	3000
580	5,80	160	3000
620	6,20	150	3000
790	7,90	120	2500

4. ELECTRIC MOTOR WITH FLANGE AND COUPLING

AC motors

___/_/___

Code	No. of phases
AC3	3
AC1	1

Code	min^{-1}
4	1500
2	3000

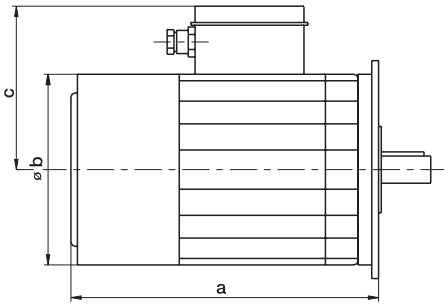

Code = P (kW)				Size (IEC)	Dimensions		
AC 3/4	AC 3/2	AC 1/4	AC 1/2		a	b	c
/	0,18	/	/	63	204	125	95
0,18	0,25	/	/				
0,25	0,37	0,18	0,25	71	233	148	115
0,37	0,55	0,25	0,37				
0,55	0,75	0,37	0,55	80	249	170	126
0,75	1,1	0,55	0,75				
1,1	1,5	0,75	1,1	90	262	185	142
1,5	2,2	1,1	1,5				
2,2	3	1,5	2,2	100	316	210	155
3	/	/	/				
Code = X; Power to be selected by supplier.							

Note:

* AC motors - 50 Hz; 230/400V - three phases; 230V - one phase.
* Starting torque of single phase motors is aproxim. 50% lower than nominal torque.
* Dimension a includes special flange for fixing electric motor to basic manifold.

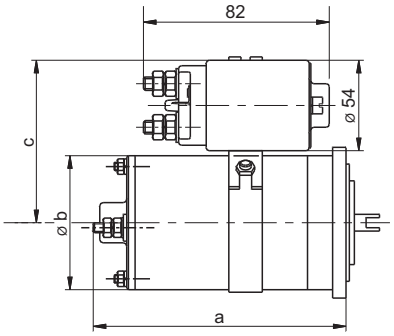

DC motors

____/_/___

Code	U(V)
DC12	12
DC24	24

Code	Relay
R	with
N	without

Code = P (kW)		Dimensions		
DC12	DC24	a	b	c
0,15		158	80	102
0,5	0,5			
1,5	2	188	112	118

Technical data

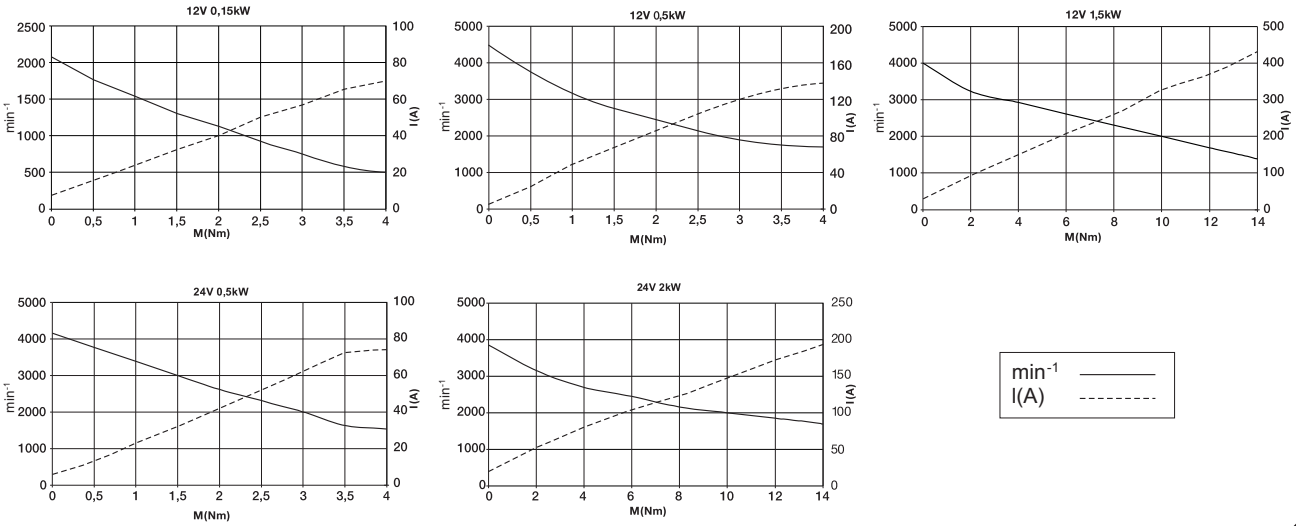

5. OIL TANK / MOUNTING POSITION

____/_

Code	Mount. position
H	Horizontal
V	Vertical

Note: Vertical mounting position is not available for R1.5, R2.5, and RC type.

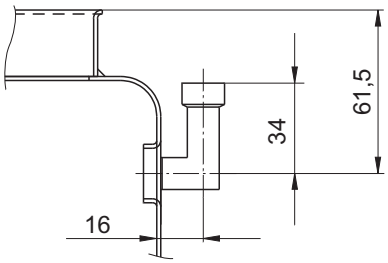

Tank inlet for vertical position.

Code	Vol. (l)	A	B	C	D	E	Pict.
R1,5	1,5	150	130	/	/	/	1
R2,5	2,5	235		/	/	/	1
R5	5	295	174	/	/	/	1
R8	8	419		/	/	/	1
R10	10	262	224	/	/	/	1
R12	12	380		/	/	/	1
RV10	10	280	200	100	305	160	2
RV16	16	300	240	110	325	180	2
RC6	6	280	200	206	210	130	3
RC10	10	340	247	250	250	170	3
RC16	16	368	290	275	270	192	3
RC25	25	490	340	317	326	176	3

Pict. 1

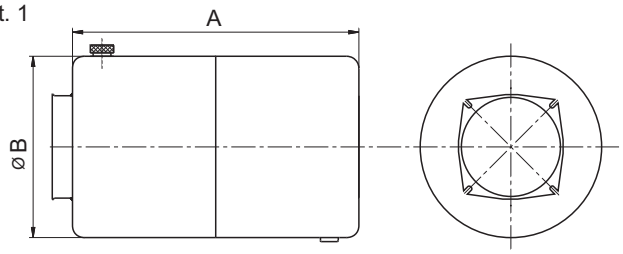

Pict. 2

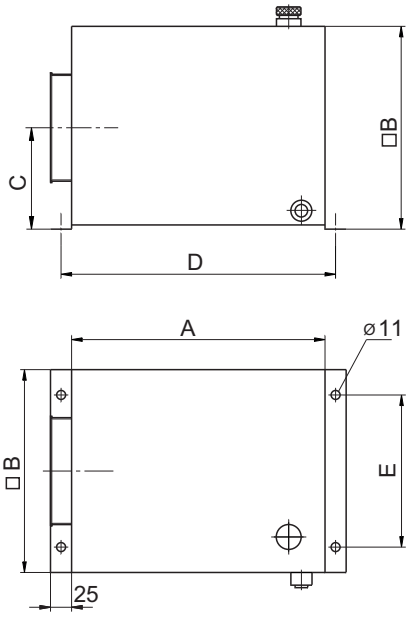

Pict. 3

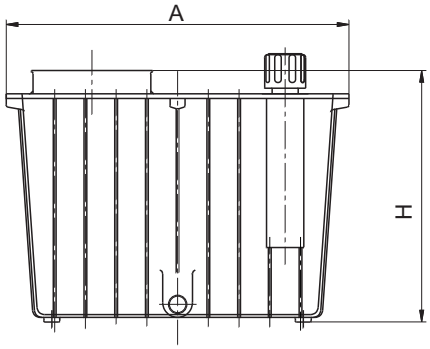

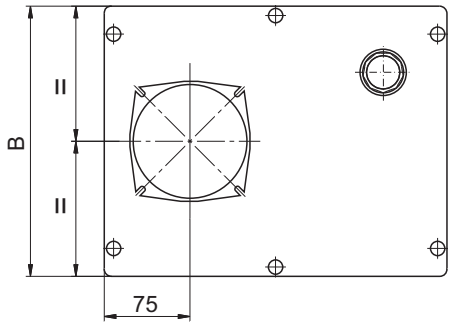

Flange

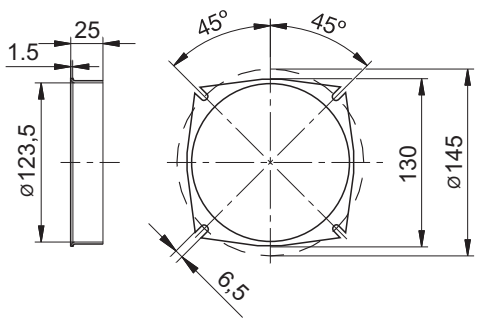

6. HYDRAULIC CONTROLS
6.1 HYDRAULIC CONTROLS FOR BASIC MANIFOLDS N2 AND N3

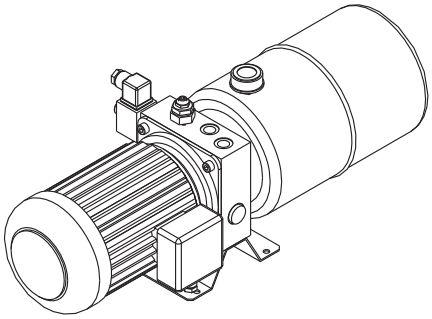

_-____/_ → Solenoid supply voltage - see 6.2.3

Code	Symbol	Code	Symbol
A	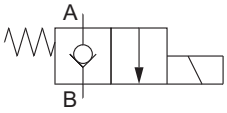	B	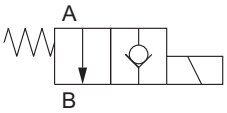
C	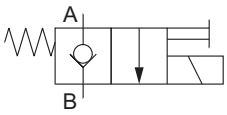	D	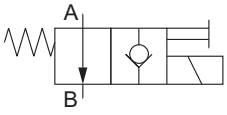

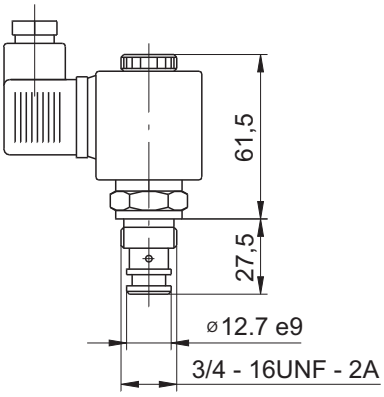

Max. operating pressure	350 bar
flow rate	30 l/min

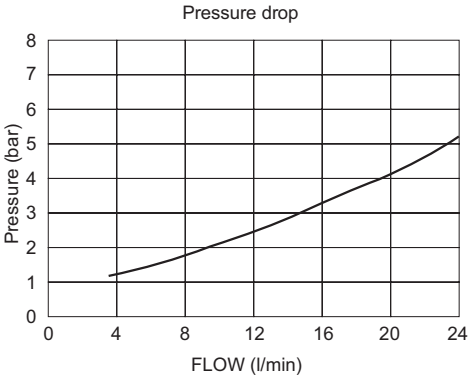

6.2 HYDRAULIC CONTROLS FOR BASIC MANIFOLDS K4 AND V1
6.2.1 DIRECTIONAL CONTROL VALVES

____/ Add. components - Solenoid supply voltage

Code	Symbol	Code	Symbol
E51A	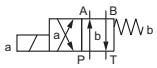	R51A	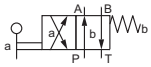
E02A	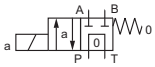	R02A	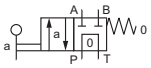
E01	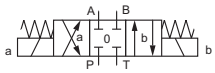	R01	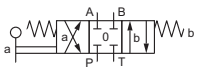
E02	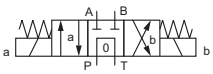	R02	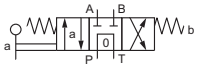
E03	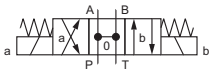	R03	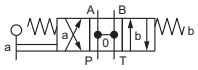
E06	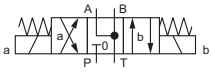	R06	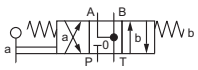

Code	Symbol
BVA	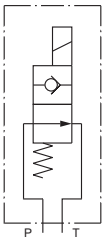
BVB	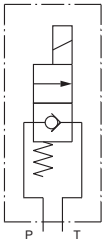

Note: BVA and BVB are by-pass valves for basic manifold V1.

6.2.2 ADDITIONAL COMPONENTS

Directional control valve /_____ - Solenoid supply voltage (see 6.2.3)

Note: X, Y = pressure setting of component (bar); all components are optional

Other components							
Check valve		Throttle / check valve		Pressure relief valve		Pressure switch	
Code	Symbol Description	Code	Symbol Description	Code	Symbol Description	Code	Connected to
NOVD	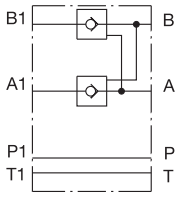 VP-NOV-6-D	NDV	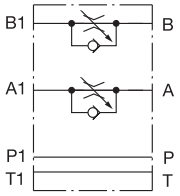 VP-NDV-6	VVPx	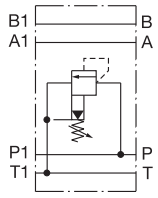 VP-RT-6-EP	One switch	
						TSAx	A
						TSBx	B
						TSPx	P
NOVA	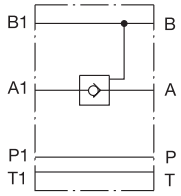 VP-NOV-6-EA			VVAx	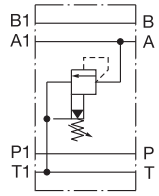 VP-RT-6-AE	Two switches	
						TSAxBy	A, B
						TSAxPy	A, P
						TSBxPy	B, P
						TSAxAy	A, A
NOVB	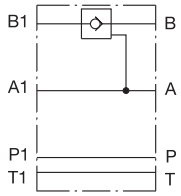 VP-NOV-6-EB			VVBx	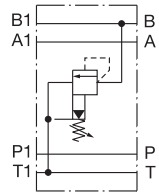 VP-RT-6-EB	TSBxBy	B, B
						TSPxPy	P, P
						Symbol	
						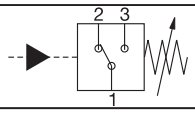	
				VVAxBy	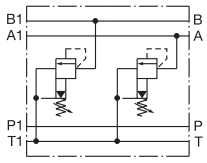 VP-RT-6-D		

Note:
All other technical details of components are presented in Kladivar's catalogue "Hydraulics".

6.2.3 SOLENOID SUPPLY VOLTAGE

Directional control valve / Add. components - _____/_

Code	Supply voltage
12DC	12V DC
24DC	24V DC
110AC	110V AC
230AC	230V AC

Code	Signal lamp
L	with
N	without

Note:
Plug-in connectors are enclosed.

BASIC MANIFOLD K4

Vertical stacking of one directional control valve with additional componets.

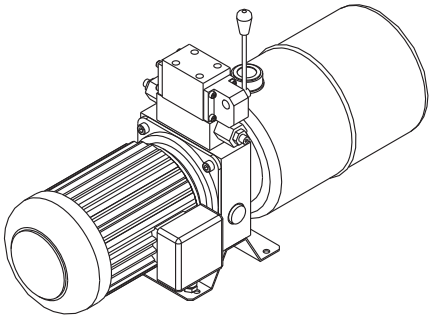

Ordering code

Directional control valve (1.1) / Additional components (1.2/1.3...) - Solenoid supply voltage.

Example for K4

1	1.1	E01	1.2	VVP 130	1.3	NOVB	1.4	TSA115	1.5	
Pos.	Directional control valve		Additional components							

Ordering example:

E01 / VVP130 / NOVB / TSA115 / ... - 24DC / L

BASIC MANIFOLD V1

Horizontal and vertical stacking up to four directional control valves with additional components.

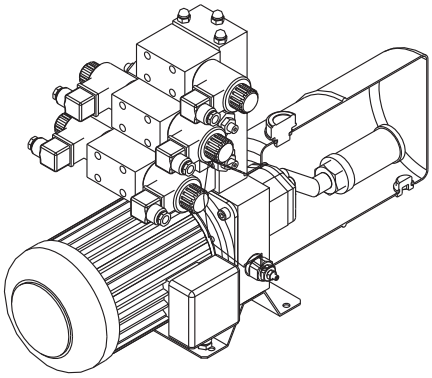

Ordering code

Directional control valve (1.1) / Additional components (1.2/1.3...) - Directional control valve (2.1) / Additional components (2.2/2.3...) - Solenoid supply voltage.

Example for V1

4	4.1	...	4.2	...	4.3	...	4.4	...	4.5	...
3	3.1	...	3.2	...	3.3	...	3.4	...	3.5	...
1	2.1	E03	2.2	VVP 130	2.3	NOVB	2.4	...	2.5	...
1	1.1	E01	1.2	VVP 130	1.3	NOVB	1.4	TSA115	1.5	...
Pos.	Directional control valve		Additional components							

Note: First row (pos. 1) is nearest to the basic manifold.

Ordering example:

E01 / VVP130 / NOVB / TSA115 / ... - E03 / VVP130 / NOVB / ...-... / ... / ... / ... -24DC / N

7. Other requirements

Other requirements should be described in writing, hydraulic circuit or drawing.

STANDARD HYDRAULIC SYSTEMS, type SHS

Modular design of SHS hydraulic systems enables wide spectrum of options applicable in different industries including complex solutions. By use of prefabricated components short-term and cost efficient production is assured.
SHS hydraulic systems are mostly used in stationary applications such as machine tools, light presses, handling equipment and similar machinery. Modular stacking with connecting dimensions to ISO 4401 allows further use of valves NS 6 or 10.

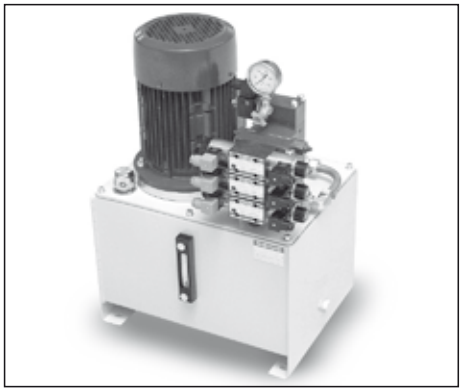

Ordering code

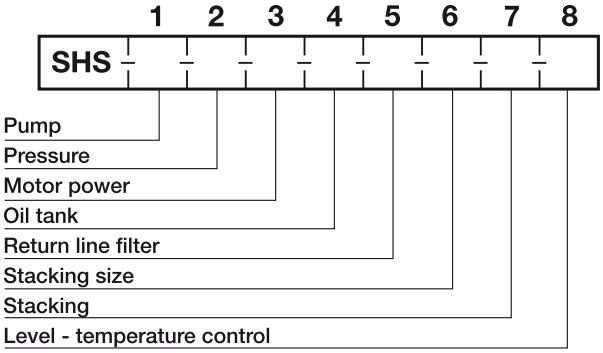

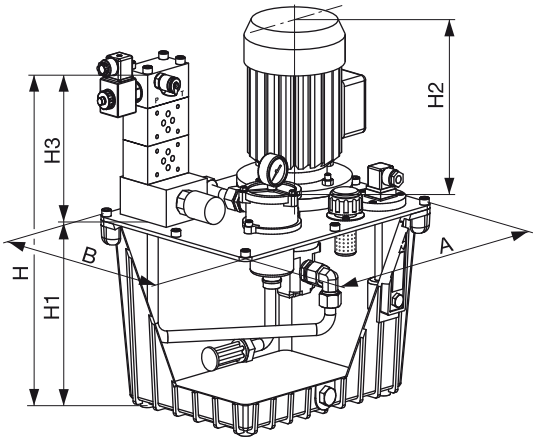

NOTE: Options shown here can not be used in all combinations. When selecting the products consider technical characteristics of its components and available space on the oil tank cover. For further questions consult Kladivar.

Order specification example

1	2	3	4	5	6	7	8
SHS –	5 –	160 –	2,2 –	C44 –	R20V –	06 –	2XT –	L

Technical data

Pump type	-	Gear pump
Displacement	cm^3	0,8 - 33
Working pressure	bar	See page 30.3.2, Code 1
Fluid type	-	Mineral oil HL or HLP (DIN 51524) (1)
Viscosity range	mm^2/s	15 - 380
Filtration	NAS 1638	Class 8
Electric motor	V	230/400 AC
	min^{-1}	1500
Motor power	kW	0,12 - 7,5
Oil tank	l	Al casted, 20 - 70 (2) Welded, 30 - 150 (2)
Stacking	-	Size 6 and 10
Overall dimensions	mm	AxBxH H=H1+max (H2, H3)
Ambient temperature	°C	-20 to +70

(1) For other fluids consult Kladivar.
(2) Sheet metal coated with RAL 7035 paint layer.

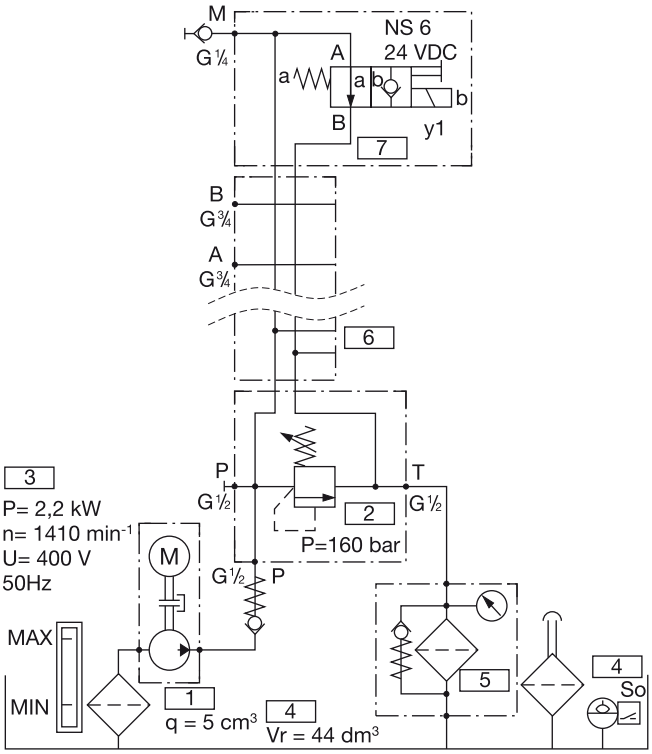

1. Pump

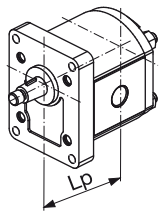

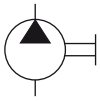

CODE 1			
Displacement (cm³)	Pressure* (bar)	Flow** (l/min)	Lp (mm)
0,8	230	1,1	76
1,6	230	2,2	79
2,5	230	3,5	82
3,0	230	4,2	74
3,6	230	5	86
4,0	230	5,6	77
4,8	160	6,7	90
5,0	230	7	80
5,8	160	8,1	94
6,0	230	8,4	82
7,9	120	11,1	102
8,0	230	11,2	88
10	230	14	93
11	230	15,4	96
14	195	19,6	103
16	170	22,4	106
19	145	26,6	111
23	120	32,2	117
27	100	37,8	123
31	88	43,4	130
33	83	46,2	133

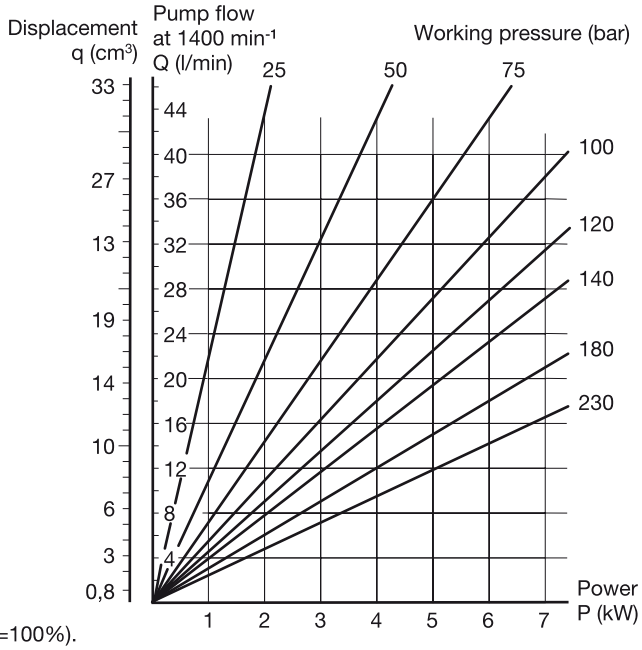

* Maximum system pressure can be limited by motor power (ED=100%).
** Pump flow at motor speed 1400 min⁻¹.

2. Pressure

CODE 2		
5 - 230	(bar)	Pressure relief valve setting

3. Motor power

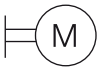

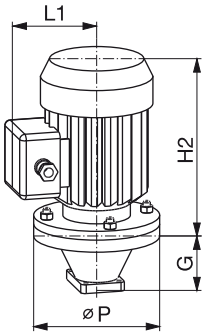

CODE 3					
Power (kW)	Speed (min⁻¹)	H2 (mm)	øP (mm)	L1 (mm)	G (mm)
0,12	1310	201	140	97	60
0,18	1330	201	140	97	
0,25	1340	225	160	105	70
0,37	1340	225	160	105	
0,55	1375	249	200	110	95
0,75	1375	249	200	110	
1,1	1410	272	200	121	
1,5	1405	272	200	121	
2,2	1410	331	250	157	
3	1410	331	250	157	105
4	1420	331	250	196	
5,5	1450	382	300	190	143
7,5	1450	420	300	190	

4. Oil tank

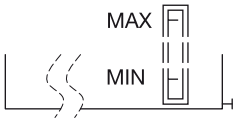

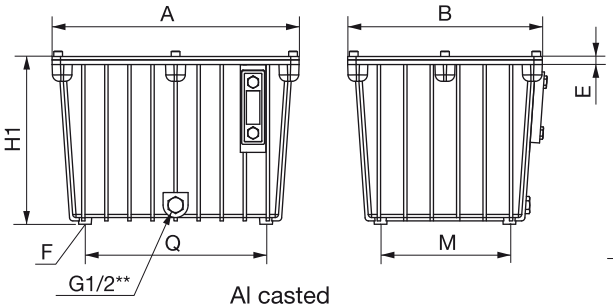

Al casted

** plugged

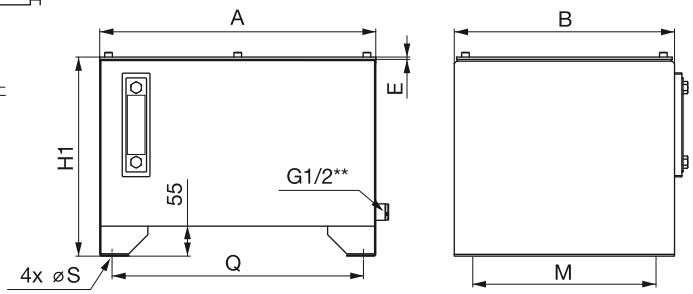

Welded

CODE 4	Type	Nominal capacity (l)	Effective capacity (l)	A x B (mm)	H1 (mm)	E (mm)	Q x M (mm)	F/⌀S (mm)	L* (mm)	Lt* (mm)
C20	Al casted	20	17	368x290	243	3	270x192	M8x16	110	50
C30	Al casted	30	26	490x340	285	3	326x176	M10x20	110	
30	welded	30	39	470x375	335	4	428x312	⌀11,5	160	
C44	Al casted	44	40	515x415	315	5	341x241	M10x15	160	
55	welded	55	58	600x470	365	4	548x401	⌀11,5	160	
C70	Al casted	70	63	605x465	365	5	422,5x282,5	M10x15	160	
75	welded	75	75	600x470	455	6	548x401	⌀11,5	200	
100	welded	100	90	700x400	550	6	640x310	⌀11,5	250	70
150	welded	150	133	750x500	600	6	690x410	⌀11,5	250	

* Further characteristics - see page 30.3.4, Code 8.

5. Return line filter

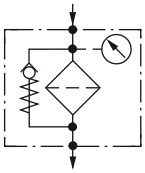

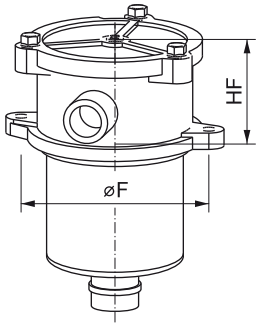

R08 to R20

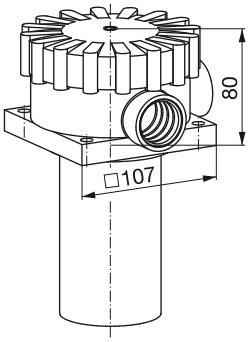

F40 to F60

CODE 5.1	Flow* [l/min]	⌀F x HF (mm)	Filtration (µm)	By-pass setting (bar)	Replecement element
R08	16	90 x 55	20 $\beta_x \geq 200$ ISO 16889	1,7	1549022
R12	32	115 x 75			1549030
R20	54	115 x 75			1549057
F40	110	Picture		1,6	1662959
F50	140				1662961
F60	180				1662963
NN	Without return line filter				

CODE 5.2	V	E	N
Clogging indicator	Visual (0-6bar) 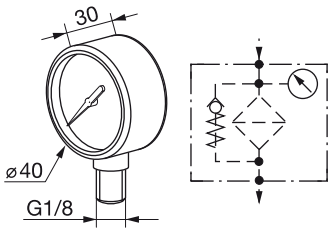	Electrical **(1,5 bar for R type filters) (1,3 bar for F type filters) 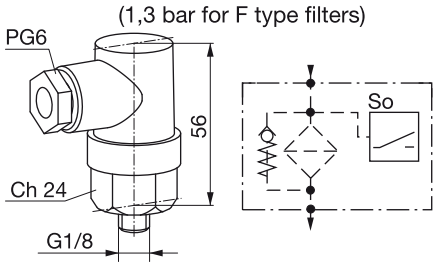	Without indicator

* At 30mm²/s and pressure drop Δp= 0,3 bar.
** Max. voltage 220V AC 50-60 Hz, max current 0,5A resistive - 0,25A inductive. Switching power 100W, protection IP65, normaly open.

6. Stacking size

CODE 6	
06	Size 6
10	Size 10
NN	Without stacking

Further characteristics - see page 30.3.4, Code 7.

7. Stacking

CODE 7.1	Connection plates
0 - 8	Number of ISO 4401 connection plates*

CODE 7.3	Pressure control
T	Test point
M	Pressure gauge with isolator valve
N	Without pressure control

CODE 7.2	By-pass (BP)	
X	BP normally open, 24VDC	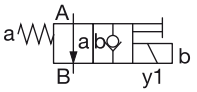
Y	BP normally open, 230VDC	
U	BP normally closed, 24VDC	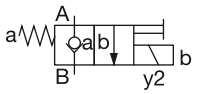
V	BP normally closed, 230VDC	
N	Without BP	

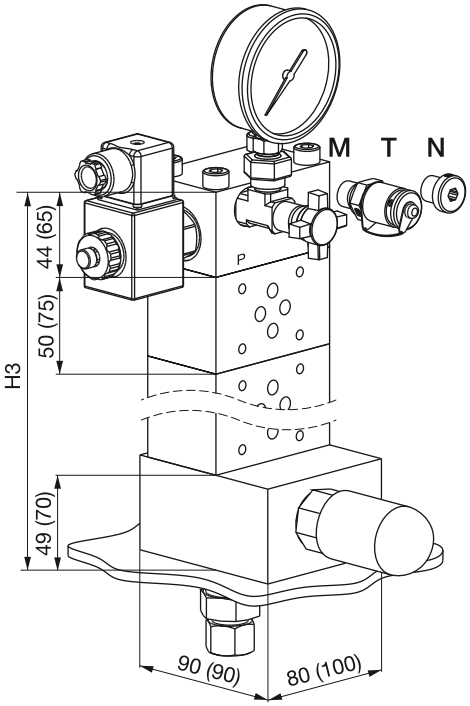

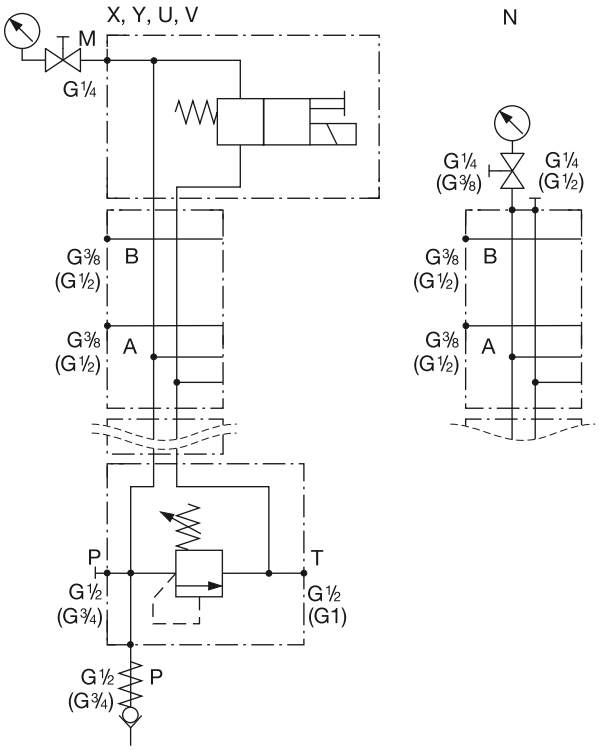

* Max. number of connection plates including by-pass valve is 8.
Dimensions of size 10 are shown in brackets.
Further characteristics - see catalogue "HK", stacking elements type EV.

8. Level - temperature control

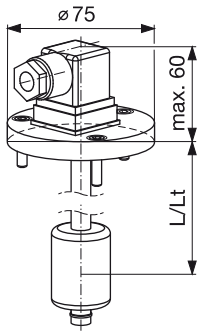

CODE 8	N	L	D	T	S
Indication	Without switch	Min. level	Min. + max. level	Min. level + temperature	Min. + max. level + temperature
		S0	S1 S0	T0 S0	T0 S1 S0

Technical data

Max. switching voltage	250 V
Max. switching current	1A
Max. switching power	15W
Switching accuracy	3-5 mm
Temperature sensor accuracy	± 5ºC
Temperature indication	70ºC

Contacts are normally open.
Switch position L and Lt - see page 30.3.3, Code 4.