VALVES POWER TRANSMISSION

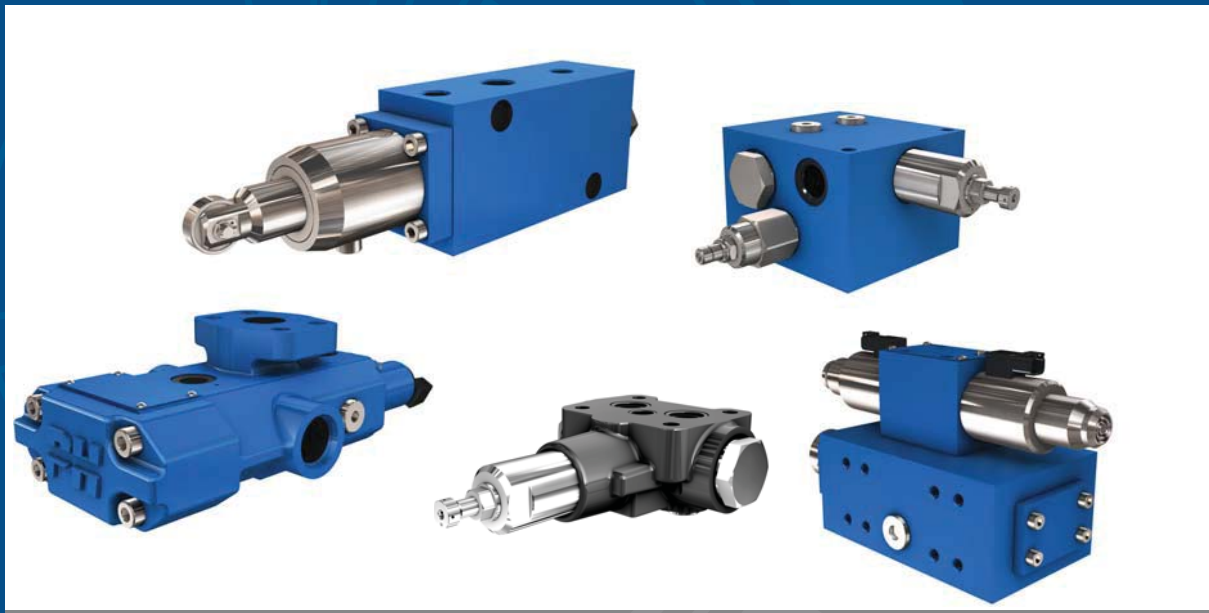

TECHNICAL CATALOG

POCLAIN Hydraulics

Methodology :
This document is intended for manufacturers of machines that incorporate Poclain Hydraulics products. It describes the technical characteristics of Poclain Hydraulics products and specifies installation conditions that will ensure optimum operation.
This document includes important comments concerning safety. They are indicated in the following way:

	Safety comment.

This document also includes essential operating instructions for the product and general information. These are indicated in the following way:

	Essential instructions.
	General information .
	Information on the model number.Information on the model code.
	Weight of component without oil.
	Volume of oil.
	Units.
	Tightening torque.
	Screws.
	Information intended for Poclain-Hydraulics personnel.

The views in this document are created using metric standards.
The dimensional data is given in mm and in inches (inches are between brackets and italic)

CONTENT

ANTI-SLIPPING VALVES 5

EXCHANGE VALVES 15

FREEWHEELING VALVES 35

FLOW DIVIDERS 45

ANTI-SLIPPING VALVES

VMA H15 7

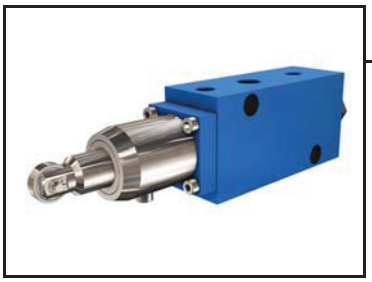

VDP H10 11

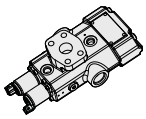

VMA H15

- Anti-slipping
- Electronically managed
- Programmable

Operation

The anti-slipping valve is an electronically managed traction control, which operates to restrict flow only when slippage is detected, by using normally wheel speed sensors and open proportional valves.

Entirely programmable, the system easily accommodates varying motor displacements and vehicle steering geometry to offer optimal performance.

Hydraulic symbol

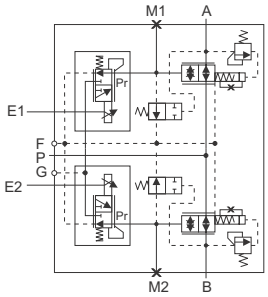

Features

Hydraulic			
Max. pressure	Bar *[PSI]*	*450 [6 526]*	
Nominal flow range	L/min *[GPM]*	up to 240 *[63.4]*	
Max restricted flow	L/min *[GPM]*	50 *[3.44]*	
Type of hydraulic connection		ISO 6162 / ISO 9974 / ISO 11 926	
Mass • piped version • flanged version	kg *[lb]*	7,2 *[15.9]* 11,9 *[26.2]*	
Surface treatment		Phosphated	
Fluid temperature	°C *[°F]*	-20 to +70 *[- 4 to +158]*	
Fluid viscosity	mm^2/s [ssu]	15 to 380 *[69.5 to 1 760]*	
Fluid contamination	ISO 4406	18/16/13	
Electrical			
Solenoid supply voltage	V direct	12	24
Solenoid current	MA	1500	750
Type of control	mA	PWM 100 Hz recommended	

Pressure drop

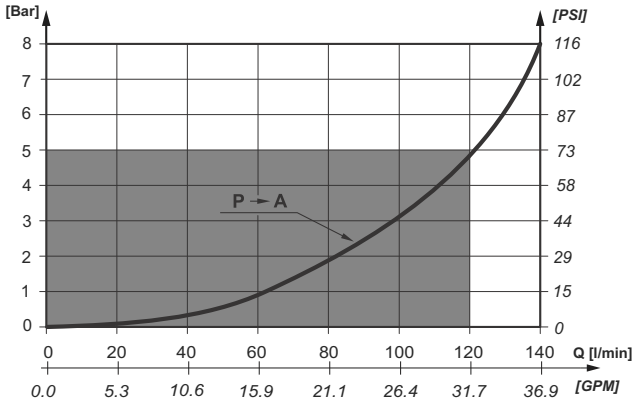

The valves must be supplied in G with a pressure between 15-30 Bar *[217-435 PSI]*. Maximum flow, from P to A or B, for a fully open valve, is 120 L/min *[31.7 GPM]* per wheel with a pressure diference (P) of 5 Bar *[72 PSI]*. (96 cSt mineral oil at 25 °C *[77 °F]*.

Dimension for piped version

V M A - H ☐ ☐ - ☐ ☐ ☐ - ☐ ☐ ☐ - ☐ 1 ☐ ☐ ☐ - ☐ ☐ ☐ ☐

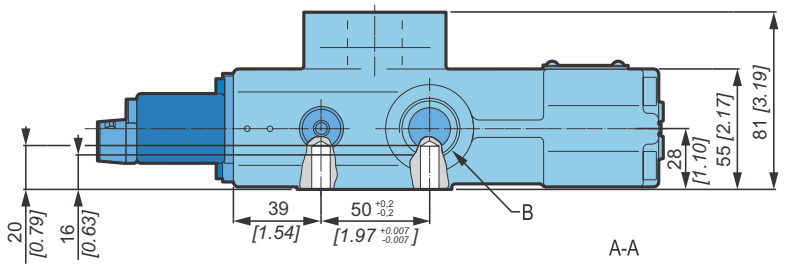

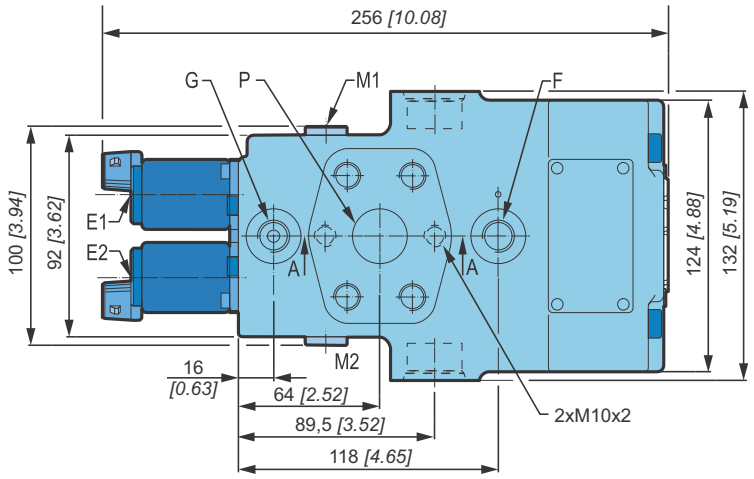

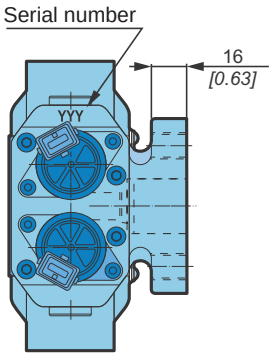

Installation

Mounting position: Indifferent

	Class	N.m *[lb.ft]* (*)
2xM10	8.8	49 *[36]*

(*) As per standard DIN 912

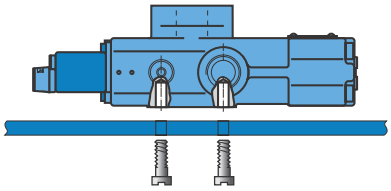

Motor and valve drain piping must be connected directly to the tank.

Hydraulic connections

Port	Function	Option 1 Connection	Option 1 Standards	Option A Connection	Option A Standards	Max. pressure Bar *[PSI]*	N.M.
P	HP function	DN 25 PN400	ISO 6162	DN 25 PN400	ISO 6162	450 *[6 526]*	90
A-B	HP function	M27x2	ISO 9974-1	1” 1/16-11 UNF-2B	ISO 11926-1	450 *[6 526]*	200
F	Drain	M14x1,5	ISO 9974-1	9/16”-18 UNF-2B	ISO 11926-1	1 *[14.5]*	45
G	LP supply	M14x1,5	ISO 9974-1	9/16”-18 UNF-2B	ISO 11926-1	15<P<30	45
M1-M2	Pressure measurement	M14x1,5	ISO 9974-1	M14x1,5	ISO 9974-1	0<P<20	45

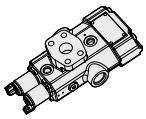

Dimension for flanged version

V	M	A	-	H			-				-				-		6				-				

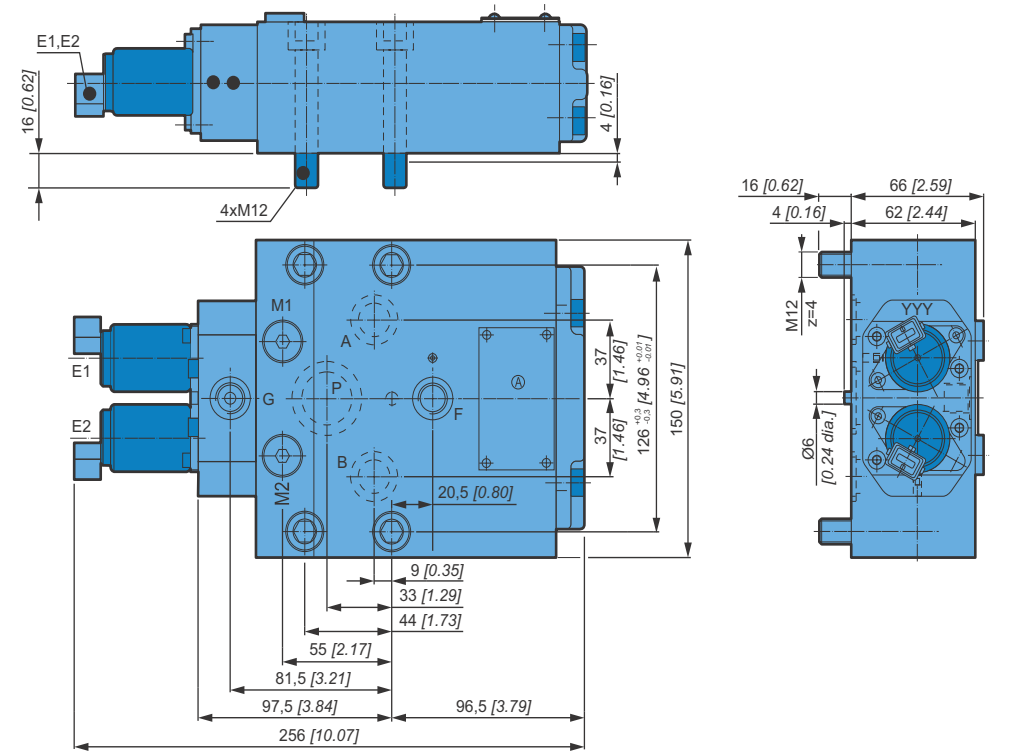

Installation

Remove the protection plate.

Make sure that Q-rings are correctly positioned.

Install the valve on the mounting face with the help from the lug.

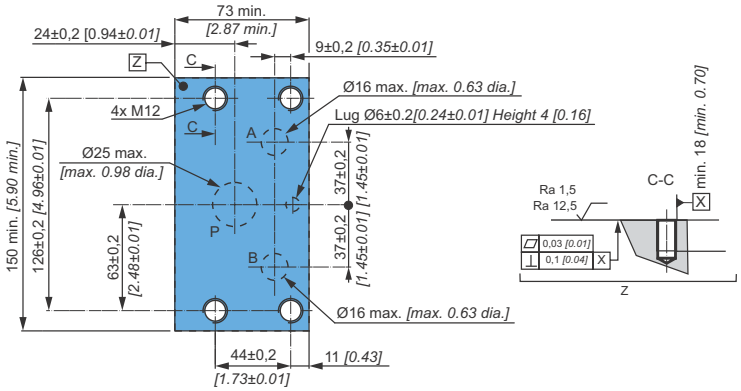

Mounting position: Indifferent

	Class	N.m *[lb.ft]*
4xM12	8.8	86 *[63.5]*

(*) As per standard DIN 912

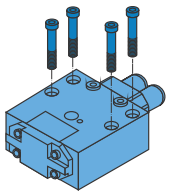

Motor and valve drain piping must be connected directly to the tank.

Hydraulic connections

Port	Function	Option 4 Connection	Option 4 Standards	Option A Connection	Option A Standards	Max. pressure Bar *[PSI]*	N.M.
P	HP function	flanged Ø25 *[dia. 0.98]*				450 *[6 526]*	
A-B	HP function	flanged Ø16 *[dia. 0.63]*				450 *[6 526]*	
F	Drain	M14x1,5	ISO 9974-1	9/16"-18 UNF-2B	ISO 11926-1	1 *[14.5]*	45
G	LP supply	M14x1,5	ISO 9974-1	9/16"-18 UNF-2B	ISO 11926-1	15<P<30	45
M1-M2	Pressure measurement	M14x1,5	ISO 9974-1	M14x1,5	ISO 9974-1	0<P<20	45

Model code

V M A - H □ □ - □ □ □ - □ □ □ - □ □ □ □ □ - □ □ □ □

Type

Valve	**V**
Multifunctional	**M**
Anti-slipping	**A**

Operating pressure

High pressure - 480 Bar *[7000 PSI]*	**H**

Input / Flow

up to 240 L/min *[63.4 GPM]*	**15**

Controled flow

20 L/min *[5.3 GPM]*	**020**
50 L/min *[13.0 GPM]*	**050**

HP setting

Without	**000**
	480
Setting: value by 3-figure number	**430**
	350

Technology

With LP protection	**1**
With LP&HP protection	**2**

Fixation type

Block to (pipping)	**1**
Flange * “PH”	**6**

* Flange for mounting

Control type

1	12V DC
2	24 V DC

Connections

0	Without
1	ISO 6162&ISO 9974-1*
4	ISO 9974-1**
A	ISO 11926-1

* Only for piped version
**Only for flanged version

Connectors

0	Without
3	Deutsch
5	AMP Junior Timer

Options

0	Without options
1	Fluorinated elastomer seals compatible with C and D fluids
B	Zincing-chromating
C	Primer
D	Special painting
F	Customized*
P	Number plate specific to the customer

* Further description on interface drawing

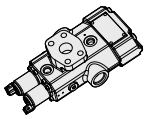

VDP H10

- Anti-slipping
- Automatic transfer of torque to the wheels
- Maximize wheel ground adhesion

Operation

VDP anti-slipping valve provides flow division while automatically transferring torque to the wheels with the greatest ground adhesion.

Hydraulic symbol

2 positions

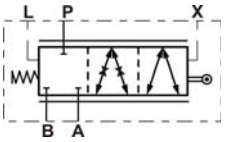

3 positions

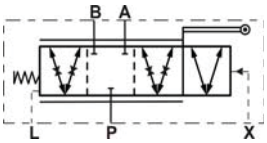

Features

		2 positions	3 positions
Max. pressure	Bar *[PSI]*	450 *[6 526]*	
Nominal flow range	L/min *[GPM]*	26 to 50 *[6.8 to 13.2]*	
Max. restricted flow	Bar *[PSI]*	50 *[725]*	
Type of hydraulic connection		ISO 1179-1	
Mass	kg *[lbs]*	2,65 *[5.84]*	3,33 *[12.8]*
Surface treatment		Zn plating 12/C (EN 12 329)	
Fluid temperature	°C *[°F]*	-20 to +70 *[-4 to +158]*	
Fluid viscosity	mm2/s *[SSU]*	15 to 380 *[69.5 to 1 760]*	

Dimensions for 2 positions

V D P - H 1 0 - 2 - - 1 -

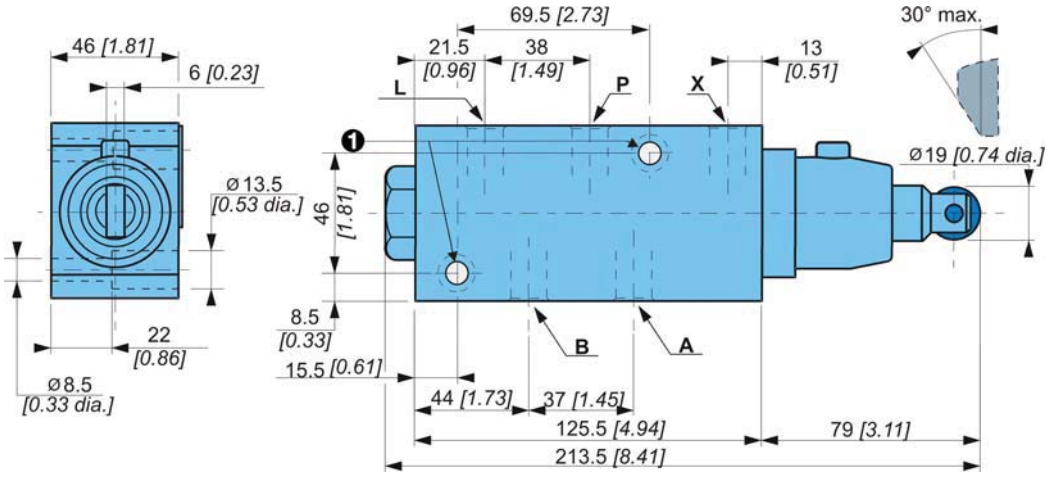

Dimensions for 3 positions command type short

V D P - H 1 0 - 3 - - 1 -

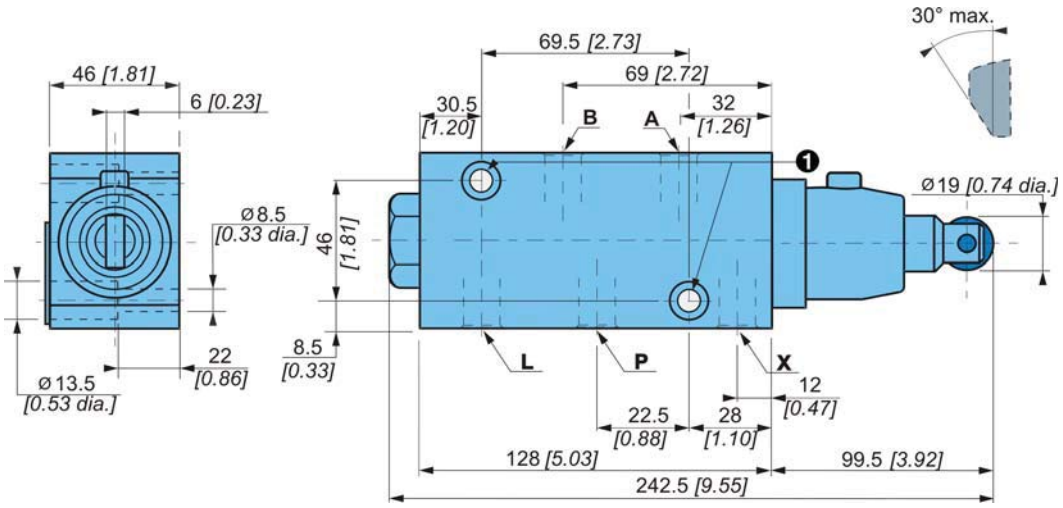

Dimensions for 3 positions command type long (according to model code)

V D P - H 1 0 - 3 - - 2 -

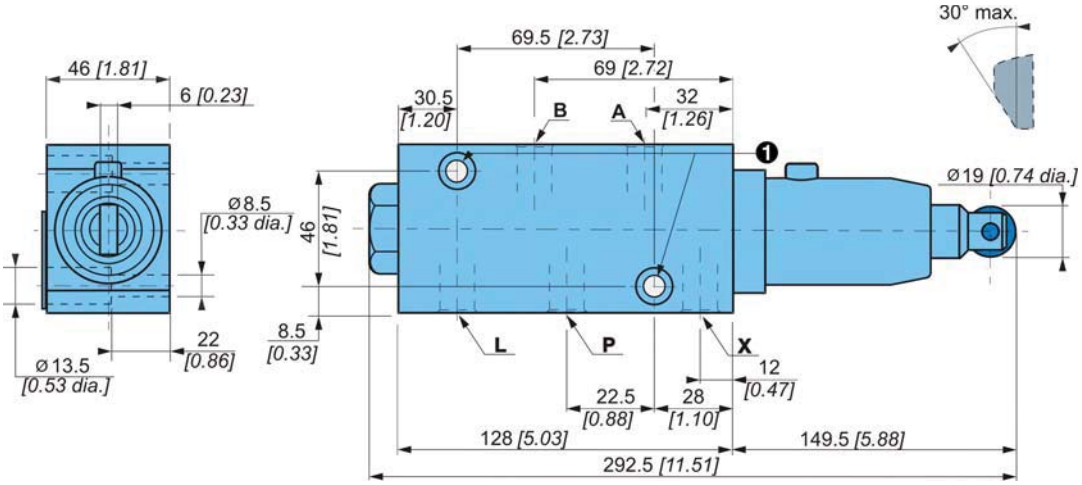

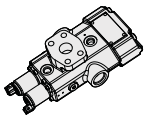

Installation

Mounting position: Indifferent

1	Class	(*) N.m *[lb.ft]*
2xM8	8.8	25 *[18]*

(*) As per standard DIN 912

Hydraulic connection

Port	Function	Connection	Max. pressure Bar *[PSI]*	Nm [lb.ft] ±10 % (as per standard DIN 912)
P-A-B	HP function	M18x1,5	450 *[6 526]*	70 *[52]*
X	Pilot	M14x1,5	50 *[752]*	45 *[33]*
L	Drain		3 *[45]*	

The operation of the cam on the roller must be limited ±30° to limit the parasite forces.

Mechanical control

	Beginning of opening N *[lbf]*	End of opening N *[lbf]*	Max. stroke mm *[in]*
2 positions	25 *[5.62]*	55 *[12.36]*	10 *[0.39]*
3 positions	49 *[11.02]*	170 *[38.22]*	16 *[0.6]*

Hydraulic control

	Beginning of opening Bar *[PSI]*	End of opening Bar *[PSI]*	Max. pressure Bar *[PSI]*
2 positions	5 *[72.5]*	11 *[160]*	50 *[725]*
3 positions	4 *[58]*	15 *[218]*	

2 positions

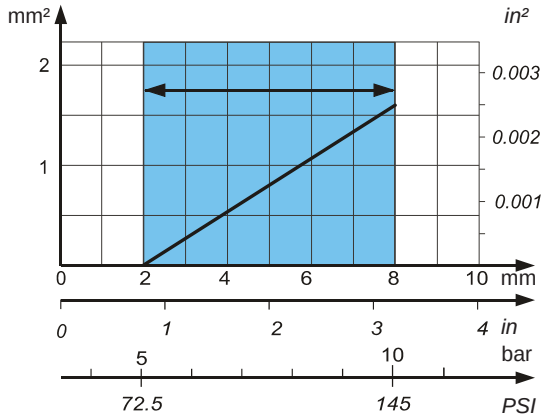

3 positions

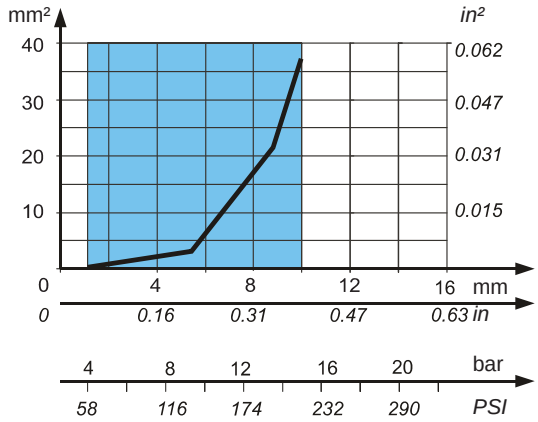

Model code

V D P - H □ □ - □ □ □ - □ □ □ □ 0 - □ □ 0 - □ □ □ □

Type

Valve	V
Directional	D
Progressive	P

Operating pressure

High pressure 450 Bar *[6 526 PSI]*	H

Debit / Flow

26 to 50 L/min *[7.0 to 13.0 GPM]*	10

Number of ways

3 ways	3

Number of positions

2 positions	2
3 positions	3

Progressiveness

Without	0
Type 1 *	1
Type 2 *	2
Type 3 **	3

* Available only with 3 positions
** Available only with 2 positions

Technology

Monobloc	M

Fixation type

1	Block (to piping)

Control type

G	Mechanical-Roller

Connection

3	ISO 1179-1 (BSPP + spot face ports)

Connector

0	Without

Command type

0	Without
1	Short
2	Long

Use

0	Standard
1	With function “road”

Reserved

0

Options

0	Without option
1	Fluorinated elastomer seals compatible with C and D fluids
A	Phosphate treated
B	Zincing-chromating
C	Primer
D	Special painting
F	Customized*
P	Number plate to the customer

* Further description on interface drawing

EXCHANGE VALVES

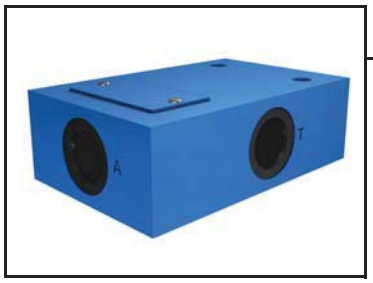

Exchange valve VE 10 17

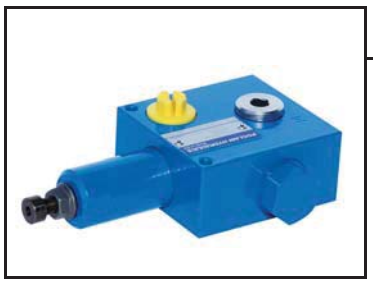

Exchange valve VE 30 21

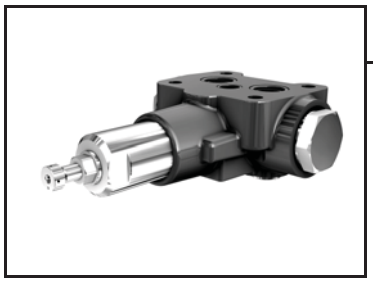

Exchange valve VE 60 HP 25

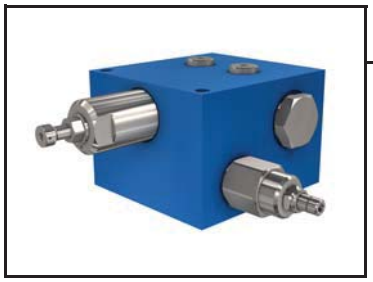

Exchange + High pressure relief valve VES 60 31

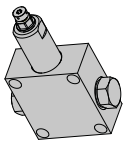

EXCHANGE VALVE VE 10

- Compact
- Heavy duty

Operation

Exchange valves are for use in bleeding hot oil from the low pressure side of a hydrostatic transmission circuit. The hot oil can be cooled, filtered or used as a source of oil for flushing other pump and motor case.

Hydraulic symbol

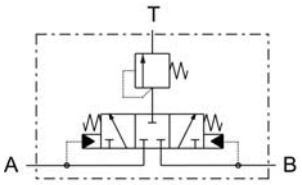

Features

Max. pressure	Bar *[PSI]*	450 *[6 526]*
Exchange relief valve setting	Bar *[PSI]*	14; 16; 18; 20 *[203; 232; 261; 290]*
Selector spool switching pressure	Bar *[PSI]*	8,5 *[123]*
Exchange flow (11 bar *[160 PSI]* ΔP)	L/min *[GPM]*	max.15 *[3.96]* (ΔP A→T or B→T)
Exchange direction		Forward and/or reverse
Mass	kg *[lbs]*	1,1 *[2.43]*

Operation

Example: relief valve set at 20 Bar *[290 PSI]*

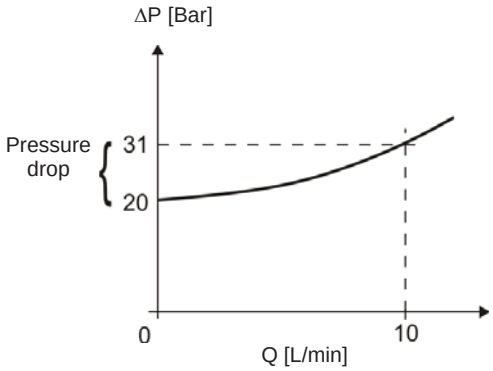

Dimensions

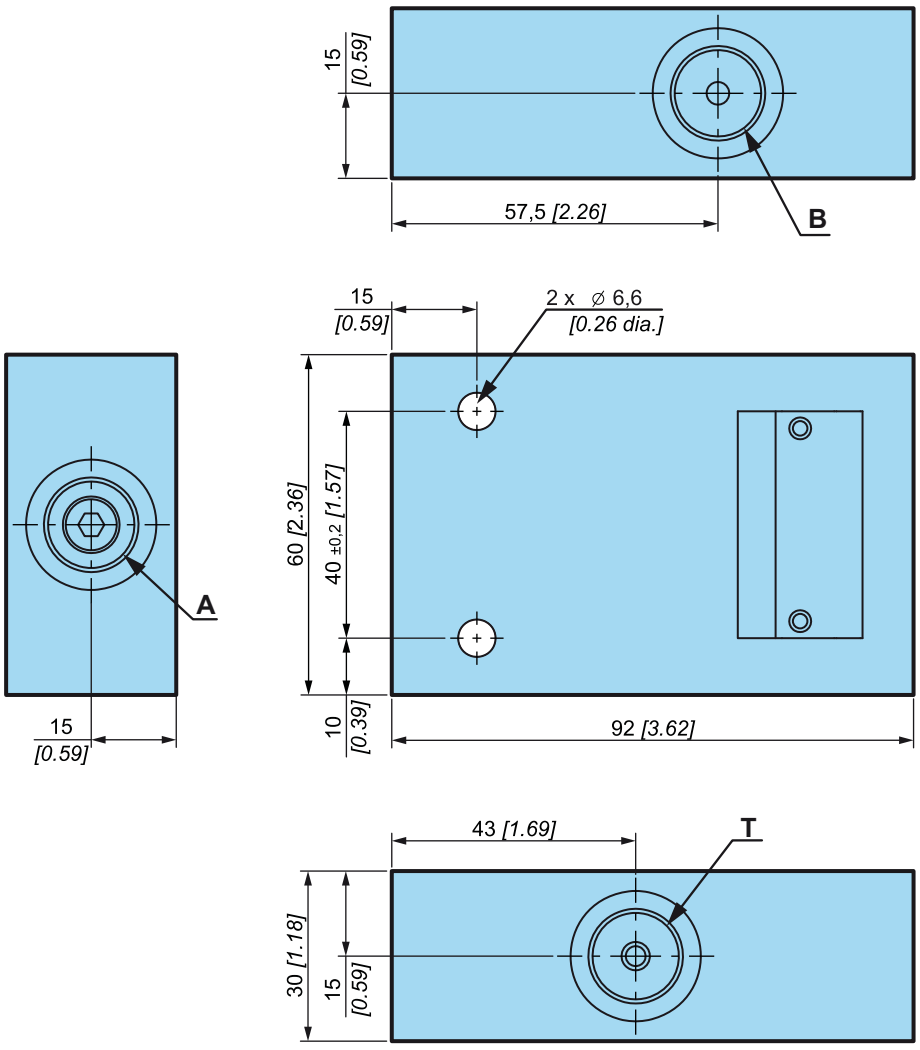

Hydraulic connections

Port	Function	Connection			Max. pressure Bar *[PSI]*
		ISO 9974-1 Type N	ISO 1179-1 Type N	ISO 11926-1	
A	HP/LP connection	M18 x 1.5	G 3/8 BSPP	9/16”-18 UNF-SAE	450 *[6 527]*
B	HP/LP connection				
T	Tank connection				5 *[72.5]*

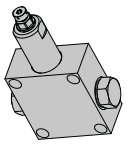

Model code

V E 1 0 - ☐ ☐ ☐ 0 ☐ ☐ - 0 0 0 0 0 - 1 ☐ 0 - ☐ ☐ ☐ ☐

Type

Valve	**V**
Exchange	**E**

Nominal flow

10 L/min *[2.64 GPM]*	**10**

Exchange direction

Unidirectional (A→T)	**A**
Bidirectional	**C**

Exchange opening pressure

14 Bar *[203 PSI]*	**14**
16 Bar *[232 PSI]*	**16**
18 Bar *[261 PSI]*	**18**
20 Bar *[290 PSI]*	**20**

Relief valve not adjustable

Restrictor diameter

00	Without restrictor
10	1,0 mm *[0.039 in]*
12	1,2 mm *[0.047 in]*
14	1,4 mm *[0.055 in]*
16	1,6 mm *[0.063 in]*
18	1,8 mm *[0.071 in]*

Port thread connection

3	ISO 1179-1 (BSPP)
4	ISO 9974-1 (Metric)
A	ISO 11926-1 (SAE, UNF)

Assembly version

1	Piped block

Specific options

0	Without
B	Zinc-Chromated
D	Special painting

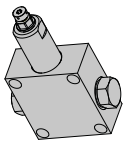

EXCHANGE VALVE VE 30

- **Compact**
- **Adjustable**
- **Heavy duty**

Piped valve

Flanged valve

Features

Exchange valves are for use in bleeding hot oil from the low pressure side of a hydrostatic transmission circuit. The hot oil can be cooled, filtered or used as a source of oil for flushing other pump and motor case.

Hydraulic symbol

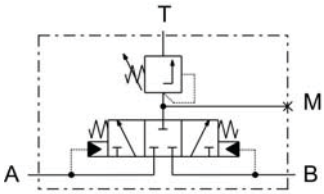

Features

Max. pressure	Bar *[PSI]*	500 *[7 252]*
Exchange relief valve setting	Bar *[PSI]*	10 to 30 *[145 to 435]*
Selector spool switching pressure	Bar *[PSI]*	8 *[116]*
Exchange flow (10 bar *[145 PSI]* ΔP)	L/min *[GPM]*	30 *[7.93]* (ΔP A→T or B→T)
Exchange direction		Forward and/or reverse
Mass	kg *[lbs]*	1,5 *[3.31]*

Pressure drop

Example: relief valve set at 20 Bar *[290 PSI]*

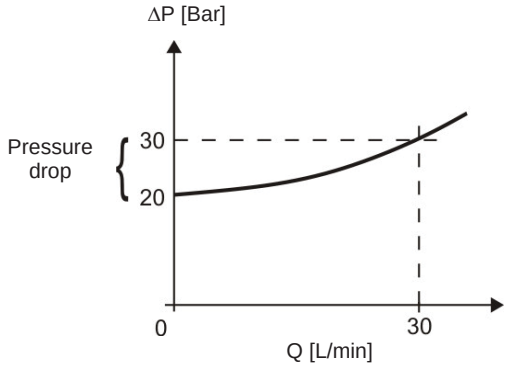

ΔP-Q Performance curves

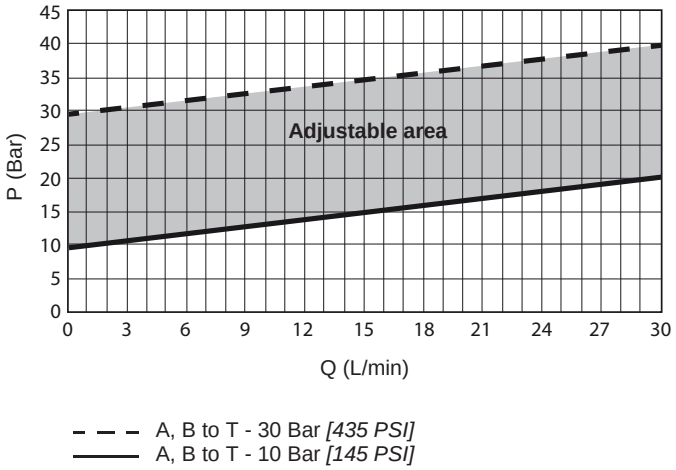

Dimensions for piped valve

Metric connections

| V | E | 3 | 0 | - | | | | | | | - | | | | | | - | 1 | | | - | | | | |

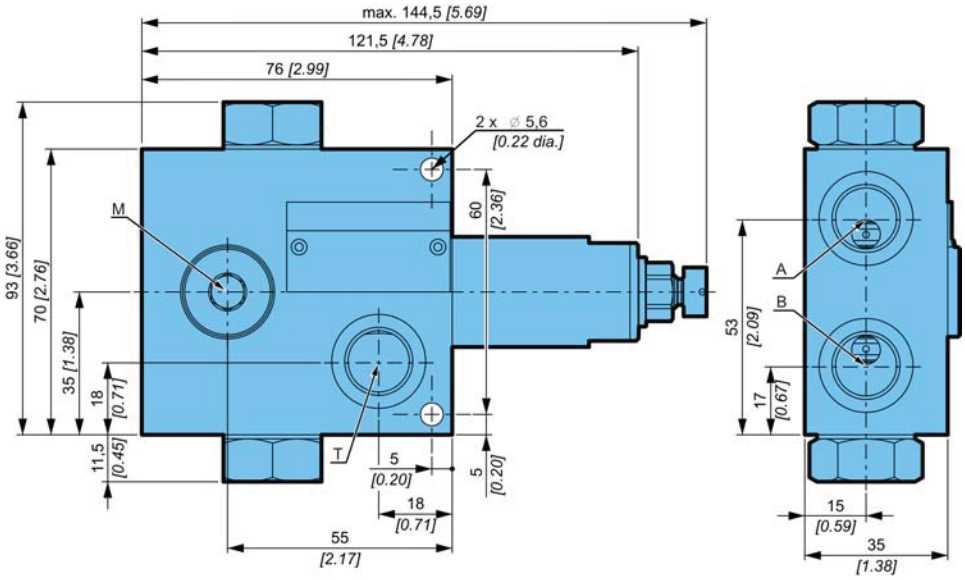

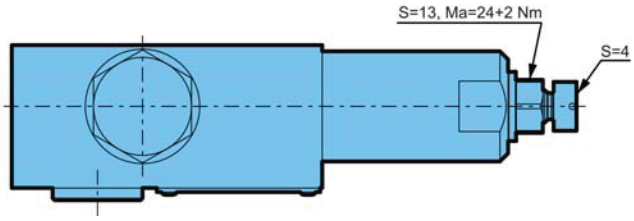

UNF connections

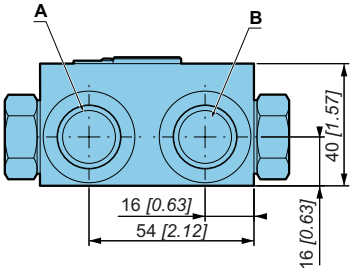

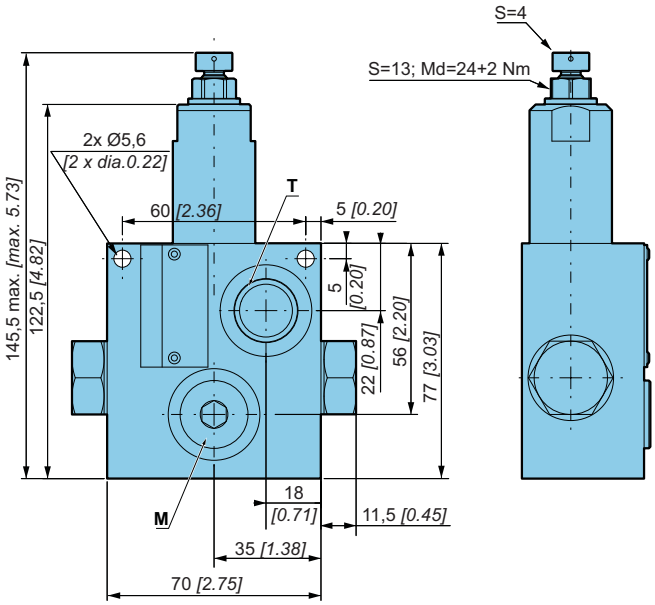

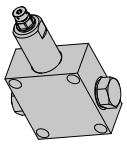

Hydraulic connections

Port	Function	Connection			Max. pressure Bar *[PSI]*
		ISO 9974-1 Type N	ISO 1179-1 Type N	ISO 11926-1	
A	HP/LP connection	M18 x 1.5	G3/8 BSPP	3/4”-16 UNF-SAE	500 *[7 252]*
B	HP/LP connection				
M	pressure measurement or service connection				
T	Tank connection				5 *[72.5]*

Dimensions for flanged valve

V	E	3	0	-							-						-	6			-				

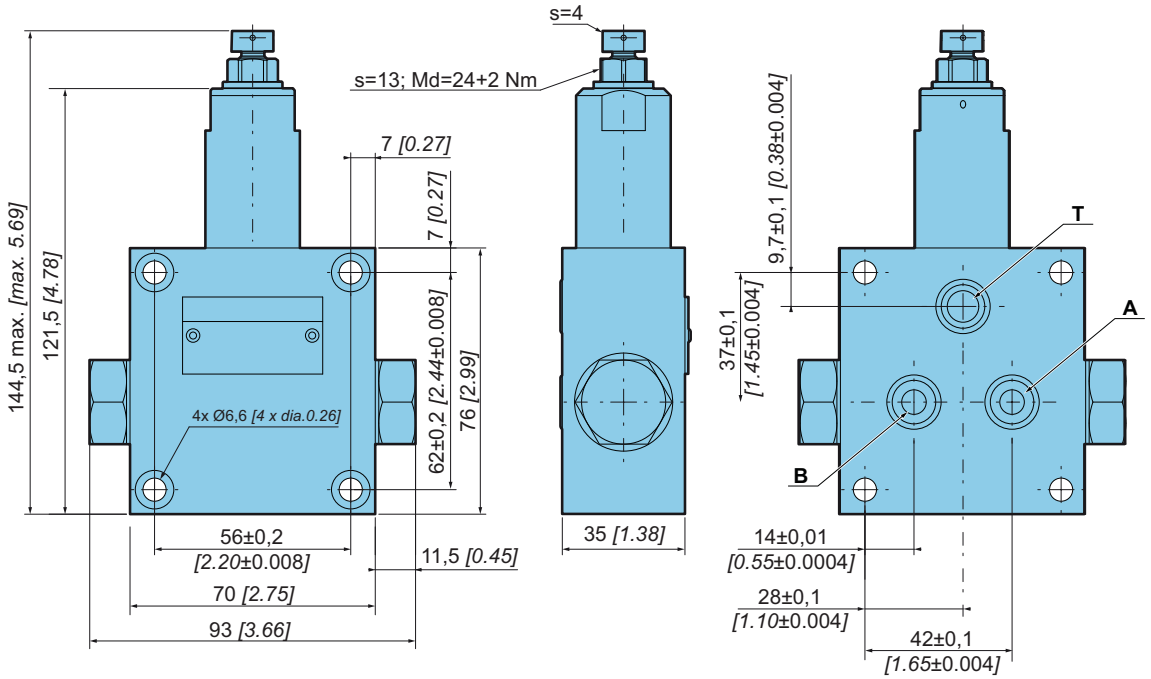

Hydraulic connections

Port	Function	Connection	Max. pressure Bar *[PSI]*
A	HP/LP connection	Ø 7 mm *[dia. 0.27 in]*	500 *[7 252]*
B	HP/LP connection		
T	Tank connection	Ø 9 mm *[dia. 0.35 in]*	5 *[72.5]*

Model code

V E 3 0 - ☐ ☐ ☐ ☐ 0 0 - 0 ☐ ☐ ☐ ☐ - ☐ ☐ ☐ - ☐ ☐ ☐ ☐

Type

Valve	**V**
Exchange	**E**

Max. flow

30 L/min *[7.93 GPM]*	**30**

Exchange direction

Unidirectional (A→T)	**A**
Unidirectional (B→T)	**B**
Bidirectional	**C**

Exchange opening pressure

10 Bar *[145 PSI]*	**10**
12 Bar *[174 PSI]*	**12**
14 Bar *[203 PSI]*	**14**
16 Bar *[232 PSI]*	**16**
18 Bar *[261 PSI]*	**18**
20 Bar *[290 PSI]*	**20**
22 Bar *[319 PSI]*	**22**
24 Bar *[348 PSI]*	**24**
26 Bar *[377 PSI]*	**26**
28 Bar *[406 PSI]*	**28**
30 Bar *[435 PSI]*	**30**

Type of exchange

0	Relief valve not adjustable
A	Adjustable relief valve

Mechanic setting range

1 0 2 0	Low range: 10 to 20 Bar *[145 to 290 PSI]*
2 0 3 0	High range: 20 to 30 Bar *[290 to 435 PSI]*

Assembly version

1	Piped valve
6	Flanged valve (A, B, T)

Port thread connection

3	ISO 1179-1 (BSPP)
4	ISO 9974-1 (Metric)
A	ISO 11926-1 (UNF SAE)

M port

0	Without
M	With *

* Only for piped valve

Specific options

0	Without
B	Zinc-Chromated
D	Special painting

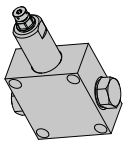

EXCHANGE VALVE VE 60 HP

HIGH PERFORMANCE

- **Compact**
- **Adjustable**
- **Heavy duty**

Flanged version

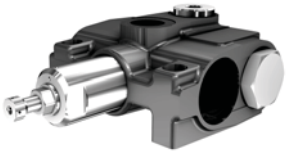

Piped version

Operation

Exchange valves are for use in bleeding hot oil from the low pressure side of a hydrostatic transmission circuit. The hot oil can be cooled, filtered or used as a source of oil for flushing other pump and motor case.

Hydraulic symbol

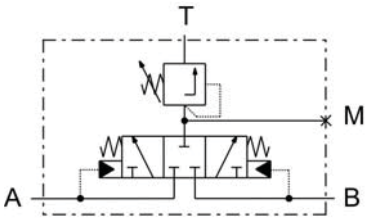

Features

		Flanged version	Piped version
Max. pressure	Bar *[PSI]*	500 *[7 252]*	
Exchange relief valve setting	Bar *[PSI]*	12 to 30 *[174 to 435]*	
Selector spool switching pressure	Bar *[PSI]*	8 *[116]*	
Exchange flow (10 bar *[145 PSI]* ΔP)	L/min *[GPM]*	60 *[15.9]*	
Exchange direction		Forward and/or reverse	
Mass	kg *[lbs]*	2,4 *[5.29]*	3,2 *[7.05]*

Pressure drop

Example: relief valve set at 20 Bar *[290 PSI]*

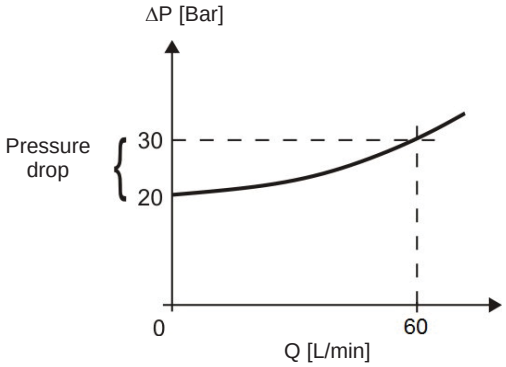

ΔP-Q Performance curves

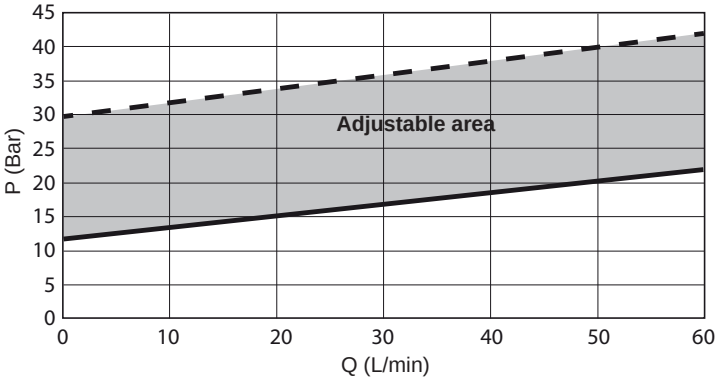

A, B to T - 30 Bar *[435 PSI]*
A, B to T - 12 Bar *[173 PSI]*

Dimensions for piped version

V E 6 0 - ☐☐☐☐☐☐ - ☐☐☐☐☐ - 2☐☐ - ☐☐☐☐

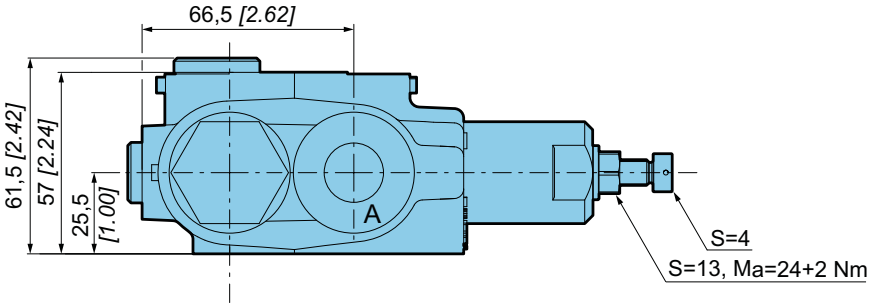

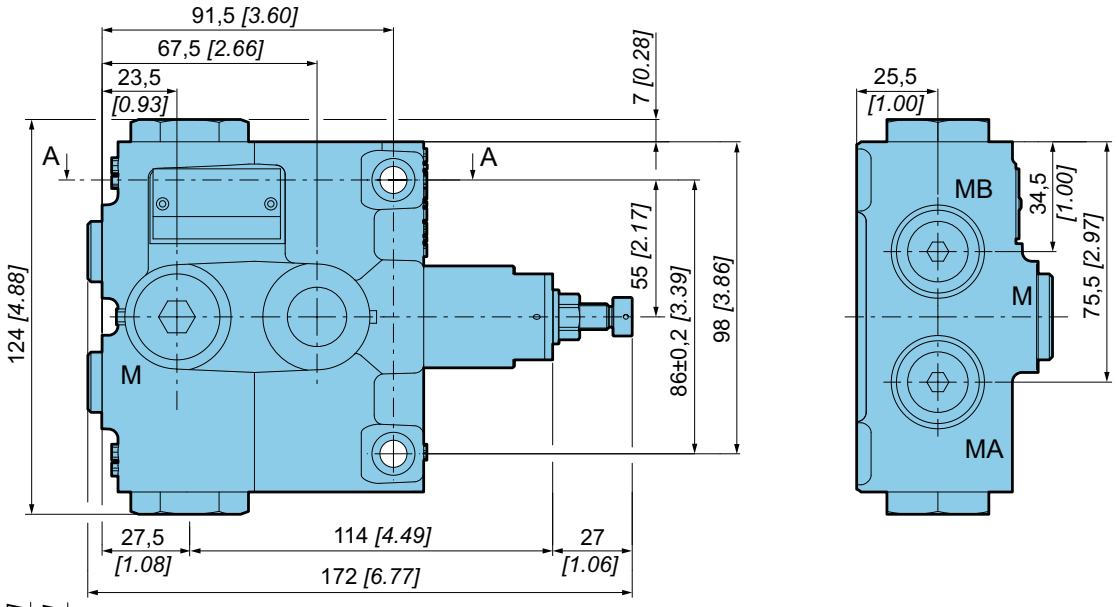

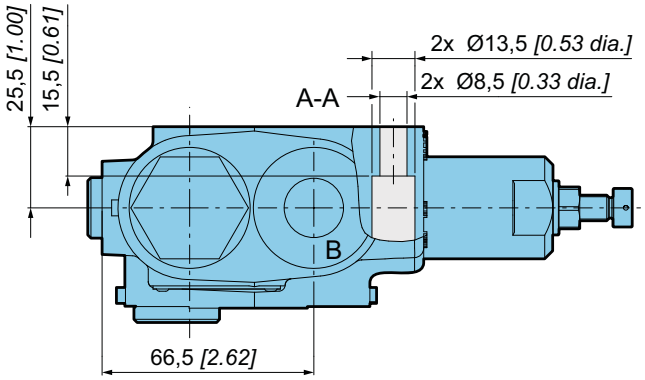

Hydraulic connections

Port	Function	Connection			Max. pressure Bar *[PSI]*
		ISO 9974-1 Type N	ISO 1179-1 Type N	ISO 11926-1	
A	HP/LP connection	M22x1.5	G1/2 BSPP	7/8”-14 UNF-SAE	500 *[7 251]*
B	HP/LP connection				
T	Tank connection				5 *[72.5]*
MA	Pressure measurement (A)	M14x1.5	G1/4 BSPP	9/16”-18 UNF-SAE	500 *[7 251]*
MB	Pressure measurement (B)				
M	Pressure measurement or service connection	M22x1.5	G1/2 BSPP	7/8”-14 UNF-SAE	500 *[7 251]*

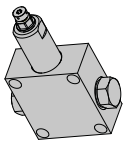

Dimensions for flanged version

V	E	6	0	-							-						-	7		0	-				

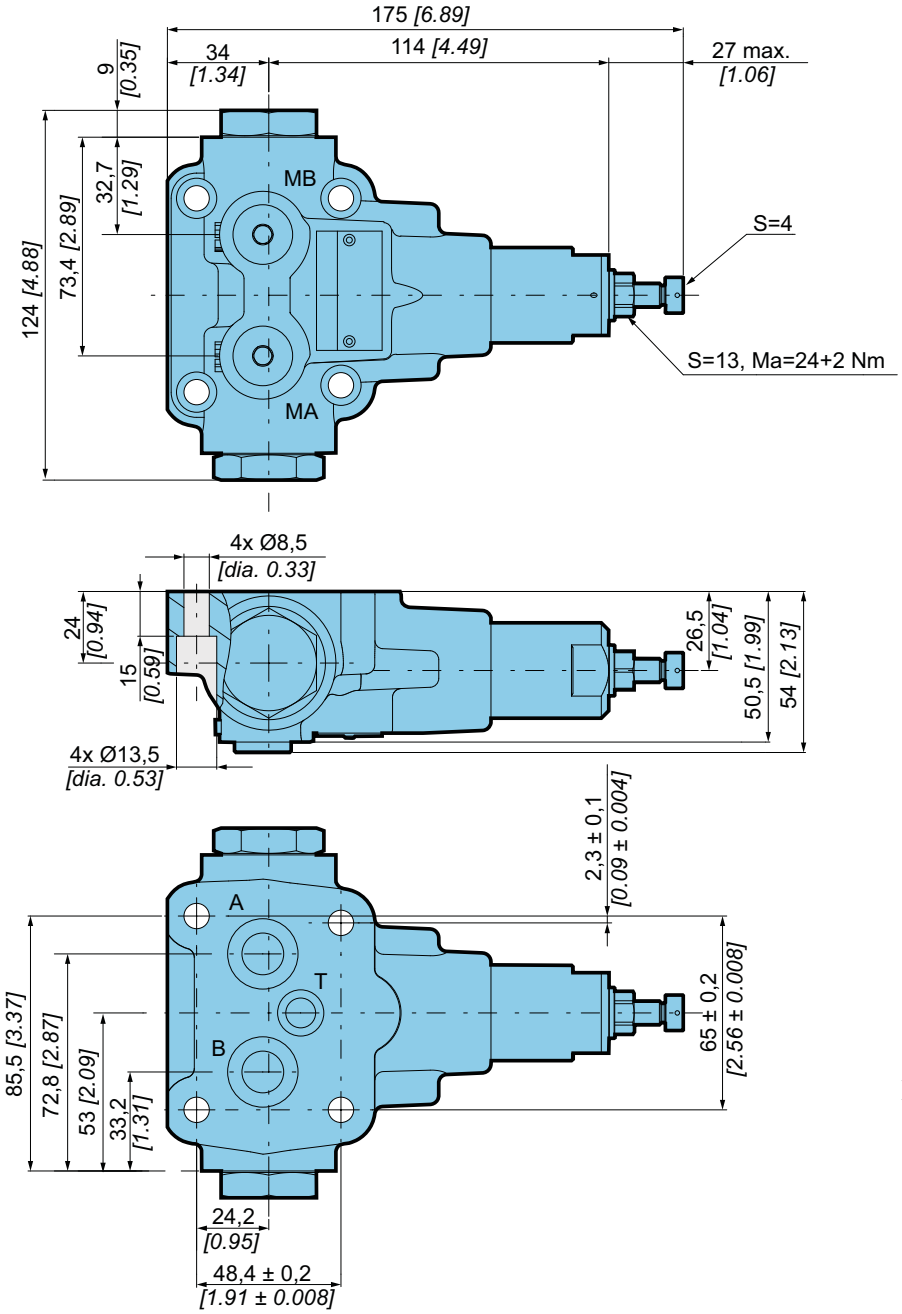

Mating surface quality

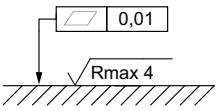

Hydraulic connections

Port	Function	Connection			Max. pressure Bar *[PSI]*
		ISO 9974-1 Type N	ISO 1179-1 Type N	ISO 11926-1	
A	HP/LP connection	Ø14 mm *[dia. 0.55 in]*	Ø14 mm *[dia. 0.55 in]*	Ø14 mm *[dia. 0.55 in]*	500 *[7 251]*
B	HP/LP connection				
T	Tank connection	Ø10 mm *[dia. 0.39 in]*	Ø10 mm *[dia. 0.39 in]*	Ø10 mm *[dia. 0.39 in]*	5 *[72.5]*
MA	Pressure measurement (A)	M14x1.5	G1/4 BSPP	9/16"-18 UNF-2B	500 *[7 251]*
MB	Pressure measurement (B)				

Dimensions with T port piped - optional

V E 6 0 - ☐☐☐☐☐☐ - ☐☐☐☐☐ - T☐☐ - ☐☐☐☐

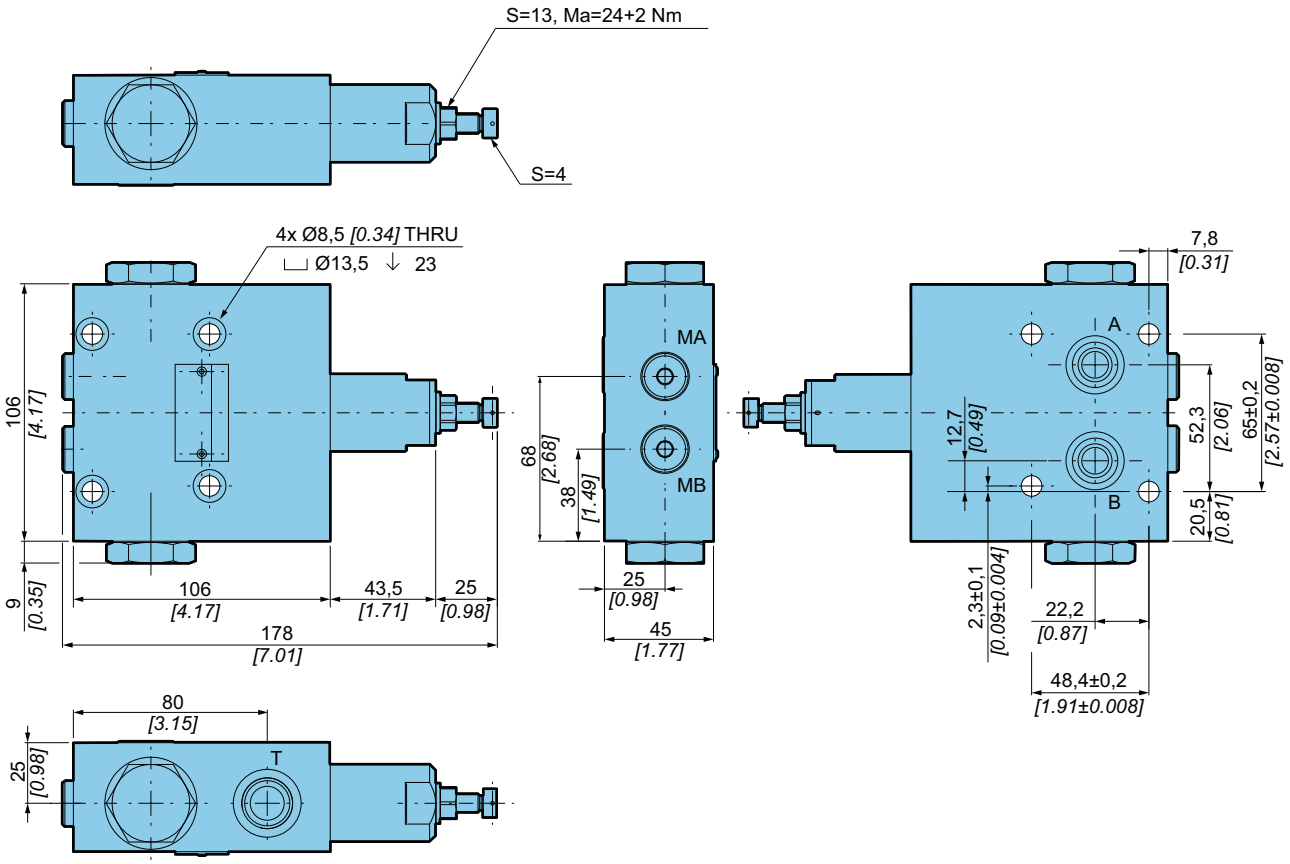

Hydraulic connections

Port	Function	Connection			Max. pressure Bar [PSI]
		ISO 9974-1 Type N	ISO 1179-1 Type N	ISO 11926-1	
A	HP/LP connection	Ø14 mm [dia. 0.55 in]	Ø14 mm [dia. 0.55 in]	Ø14 mm [dia. 0.55 in]	500 [7 251]
B	HP/LP connection				
T	Tank connection	M22x1.5	G1/2 BSPP	7/8"-14 UNF-2B	5 [72.5]
MA	Pressure measurement (A)	M14x1.5	G1/4 BSPP	9/16"-18 UNF-2B	500 [7 251]
MB	Pressure measurement (B)				

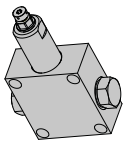

Model code

V E 6 0 - ☐☐☐☐ 0 0 - 0☐☐☐☐ - ☐☐☐ - ☐☐☐☐

Type

Valve	**V**
Exchange	**E**

Max. flow

60 L/min *[15.85 GPM]*	**60**

Exchange direction

Unidirectional (A→T)	**A**
Unidirectional (B→T)	**B**
Bidirectional	**C**

Exchange opening pressure

12 Bar *[174 PSI]*	**12**
14 Bar *[203 PSI]*	**14**
16 Bar *[232 PSI]*	**16**
18 Bar *[261 PSI]*	**18**
20 Bar *[290 PSI]*	**20**
22 Bar *[319 PSI]*	**22**
24 Bar *[348 PSI]*	**24**
26 Bar *[377 PSI]*	**26**
28 Bar *[406 PSI]*	**28**
30 Bar *[435 PSI]*	**30**

Type of exchange

Relief valve not adjustable	**0**
Adjustable relief valve	**A**

Options

0	Without
1	With by-pass (A-B, B-A)
D	Special painting
B	Zinc-Chromated
P	Customer name plate
F	Customized*

* Further description on interface drawing

M port

0	Plugged/Without*
M	Open**

* M port plugged only with piped version
** Only available with piped valve

Port thread connection

3	ISO 1179-1 (BSPP)
4	ISO 9974-1 (Metric)
A	ISO 11926-1 (UNF SAE)

Assembly version

2	Piped block - casted body
7	Flanged block (A, B, T) - casted body
T	Flanged valve with T port piped

Mechanic setting range

1 2 1 8	Low range: 12 to 18 Bar *[174 to 261 PSI]*
1 8 3 0	High range: 18 to 30 Bar *[261 to 435 PSI]*

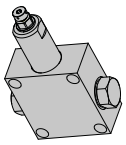

EXCHANGE + HIGH PRESSURE RELIEF VALVE VES 60

- **Compact**
- **Adjustable**
- **Heavy duty**
- **Integrated high pressure relief valve**

Operation

Exchange valves are for use in bleeding hot oil from the low pressure side of a hydrostatic transmission circuit. The hot oil can be cooled, filtered or used as a source of oil for flushing other pump and motor case.

Hydraulic symbol

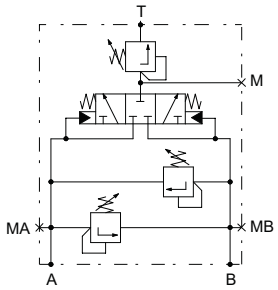

Features

Max. pressure	Bar *[PSI]*	450 *[6 526]*
Exchange relief valve setting	Bar *[PSI]*	12 to 30 *[174 to 435]*
Selector spool switching pressure	Bar *[PSI]*	8 *[116]*
Exchange flow (10 bar *[145 PSI]* ΔP)	L/min *[GPM]*	60 *[15.9]*
Exchange direction		Forward and/or reverse
Mass	kg *[lbs]*	7,3 *[16.09]*

Pressure drop

Example: relief valve set at 20 Bar *[290 PSI]*

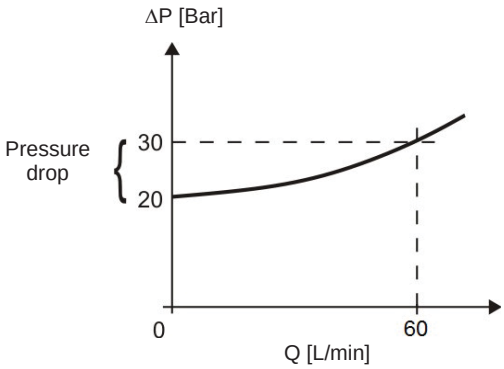

ΔP-Q Performance curves

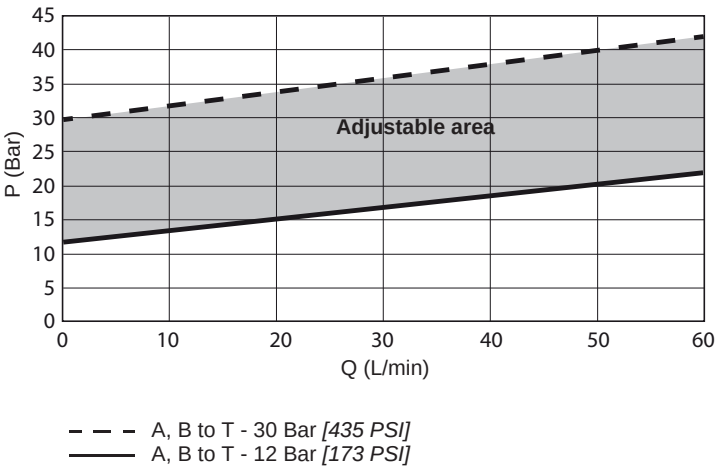

Dimensions for VES60 flanged version

V	E	S	6	0	-	☐☐☐☐	-	☐	-	☐☐☐	-	☐☐☐	-	6	☐	☐	-	☐☐☐☐

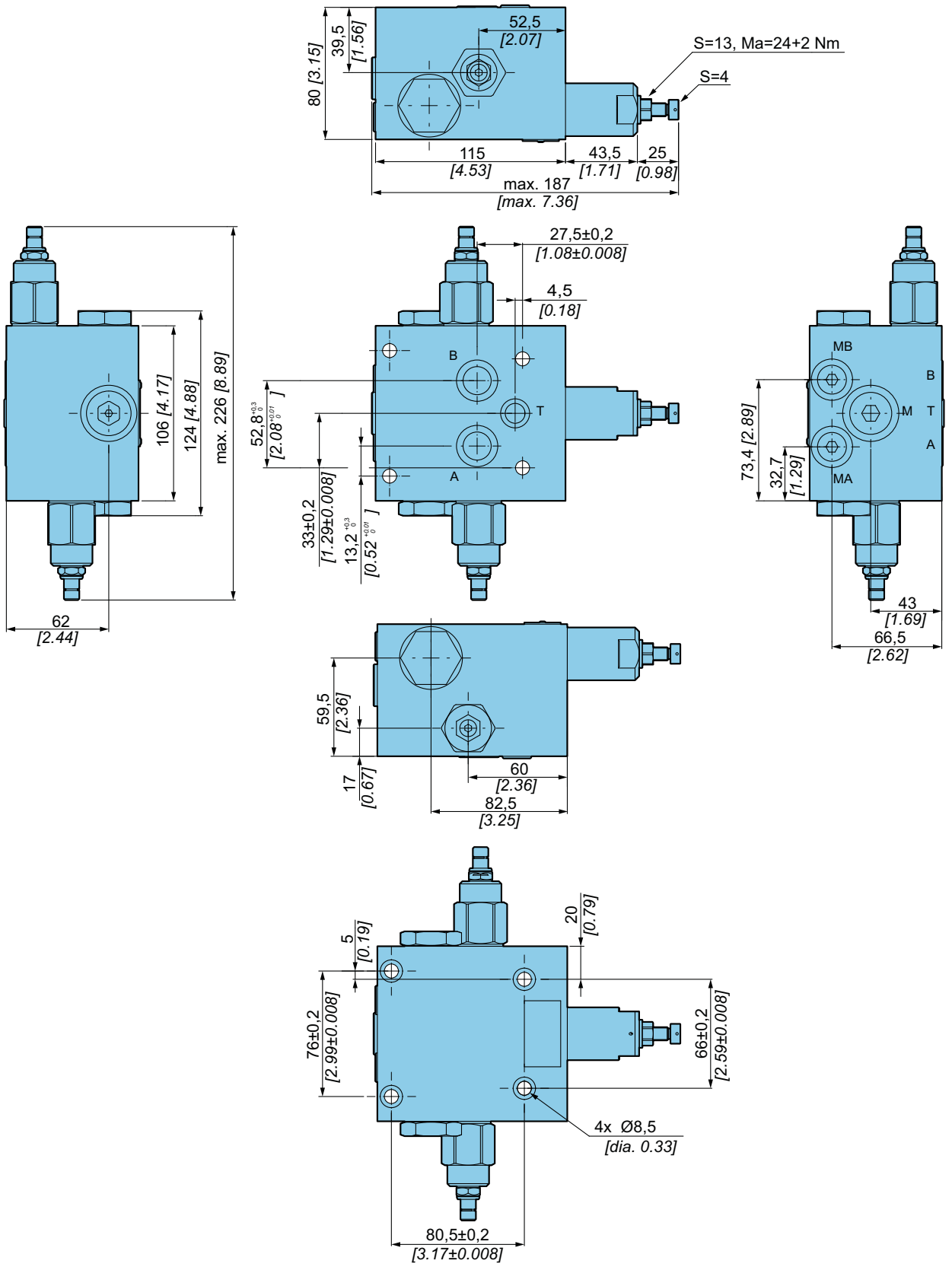

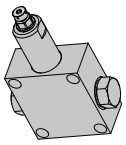

Dimensions for VES60 piped version

V E S 6 0 - ☐☐☐☐ - ☐ - ☐☐☐ - ☐☐☐ - 1☐☐ - ☐☐☐☐

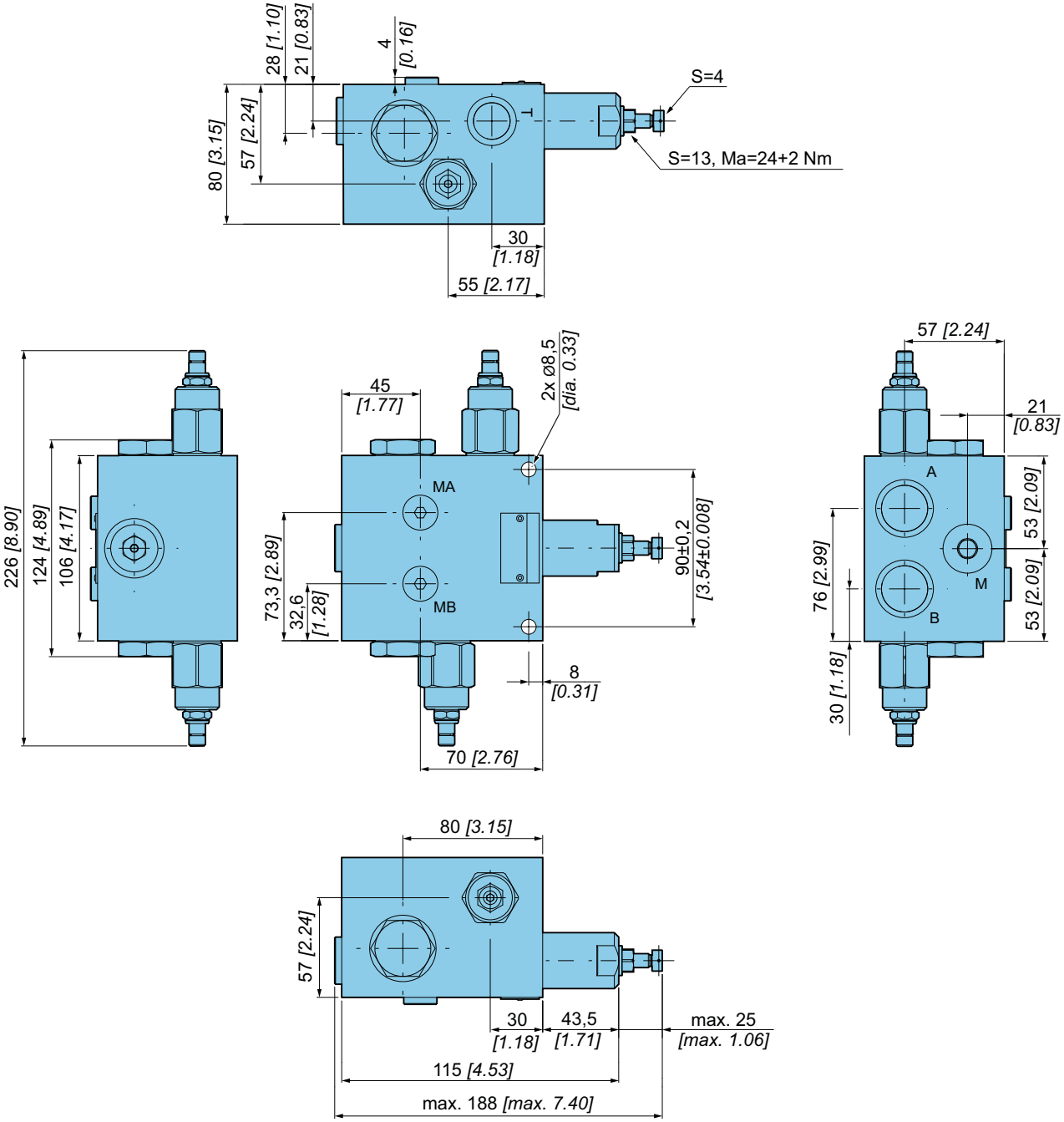

Hydraulic connections

Port	Function	Connection			Max. pressure Bar [PSI]
		BSPP ISO 1179-1	Metric ISO 9974-1	UNF ISO 11926-1	
A	HP/LP connection	G3/4	M27x2	1"1/16-12 UNF-2B	450 [6 526]
B	HP/LP connection				
T	Tank connection	G1/2	M22x1.5	7/8"-14 UNF-2B	5 [72.5]
MA	Pressure measurement (A)	G1/4	M14x1.5	9/16"-18 UNF-2B	450 [6 526]
MB	Pressure measurement (B)				
M	Pressure measurement of service connection	G1/2	M22x1.5	7/8"-14 UNF-2B	450 [6 526]

Model code

V E S 6 0 - ☐☐☐☐ - ☐ - ☐☐☐ - ☐☐☐ - ☐☐☐ - ☐☐☐☐

Type

Valve	**V**
Exchange	**E**
Safety	**S**

Max. flow

60 L/min *[15.85 GPM]*	**60**

Exchange direction

Unidirectional (A→T)	**A**
Unidirectional (B→T)	**B**
Bidirectional	**C**

Exchange opening pressure

12 Bar *[174 PSI]*	**12**	Spring range: Low range = 12-18 Bar
14 Bar *[203 PSI]*	**14**	
16 Bar *[232 PSI]*	**16**	
18 Bar *[261 PSI]*	**18**	
20 Bar *[290 PSI]*	**20**	Spring range: High range = 18-30 Bar
22 Bar *[319 PSI]*	**22**	
24 Bar *[348 PSI]*	**24**	
26 Bar *[377 PSI]*	**26**	
28 Bar *[406 PSI]*	**28**	
30 Bar *[435 PSI]*	**30**	

Exchange relief setting

Relief valve not adjustable	**0**
Adjustable relief valve	**A**

HP relief valve type

A-B; B-A (Adjustable)	**3**

HP relief valve setting on A

160 Bar *[2 320 PSI]*	**160**
210 Bar *[3 045 PSI]*	**210**
250 Bar *[3 625 PSI]*	**250**
300 Bar *[4 351 PSI]*	**300**
350 Bar *[5 076 PSI]*	**350**
420 Bar *[6 091 PSI]*	**420**

HP relief valve setting on B

160	160 Bar *[2 320 PSI]*
210	210 Bar *[3 045 PSI]*
250	250 Bar *[3 625 PSI]*
300	300 Bar *[4 351 PSI]*
350	350 Bar *[5 076 PSI]*
420	420 Bar *[6 091 PSI]*

Port thread connection

3	ISO 1179-1 G1/2 BSPP (A, B, T) G1/4 BSPP (MA, MB)
4	ISO 9974-1 M27x2 Metric (A,B) M22 x 1,5 Metric (M,T) M14 x 1,5 Metric (MA, MB)
A	ISO 11926-1 7/8-14 UNF SAE (A, B,T) 9/16-18 UNF SAE (MA, MB)

Assembly version

1	Piped block
6	Flanged block

M port

0	Without
M	With *

(*) M thread size = A, B, T)

Options

0	Without
D	Special painting
B	Primer paint

FREEWHEELING VALVES

VDF H15 37

VDF H25 41

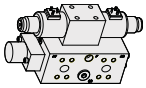

VDF H15

- Free-wheeling
- Heavy duty
- Reliable

Operation

The free-wheeling valve allows to disengage the hydraulic motor by allowing the pistons to return in cylinder-blocks and the motor to turn in freewheeling mode. It prevents contacts of camring and pistons at high speed.

Hydraulic symbol

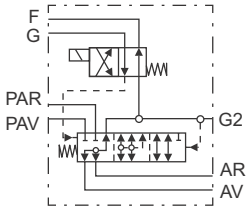

Features

Hydraulic		
Max. pressure	Bar *[PSI]*	*450 [6 526]*
Nominal flow range	L/min *[GPM]*	50 to 95 *[13.20 to 25]*
Min. control pressure	Bar *[PSI]*	10 *[145]*
Type of hydraulic connection		ISO 1179-1 (BSPP); ISO 11926-1 (UNF); ISO 9974-1 (Metric)
Mass • without pilot valve • with pilot valve: 2 positions • with pilot valve: 3 positions	kg *[lb]*	 11,8 *[26.01]* 18,3 *[40.34]* 19,1 *[42.10]*
Surface treatment		Zn plating Fe/Zn8/Cn/T2 (DIN 50979)
Fluid temperature	°C *[°F]*	-20 to +90 *[-4 to -200]*
Fluid viscosity	mm^2/s [ssu]	15 to 380 *[69.5 to 1 760]*
Fluid contamination	ISO 4406	18/16/13

Electrical		
Solenoid supply voltage	V direct	12/24V
	V alternative	110V
Solenoid duty cycle		Continuous
Max. ambient temperature	°C *[°F]*	50 *[122]*

Pressure drop

Measured at 20°C *[68°F]*

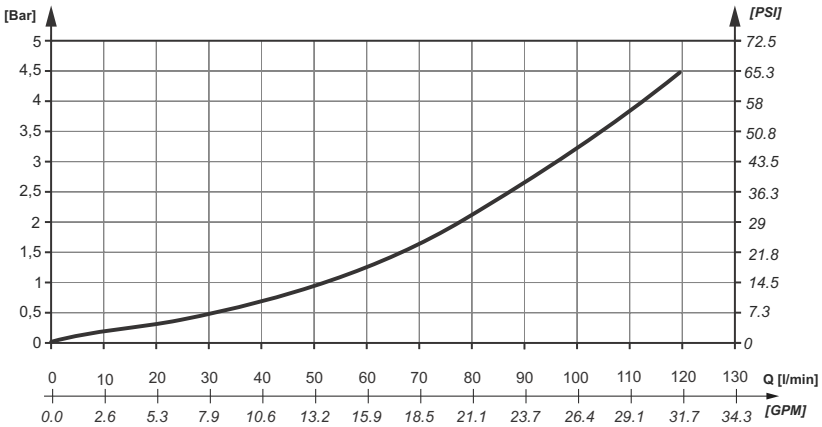

Dimensions without pilot valve

V D F - H 1 5 - ☐ - 0 0 0 - ☐☐☐ ☐☐ - ☐☐☐☐☐☐

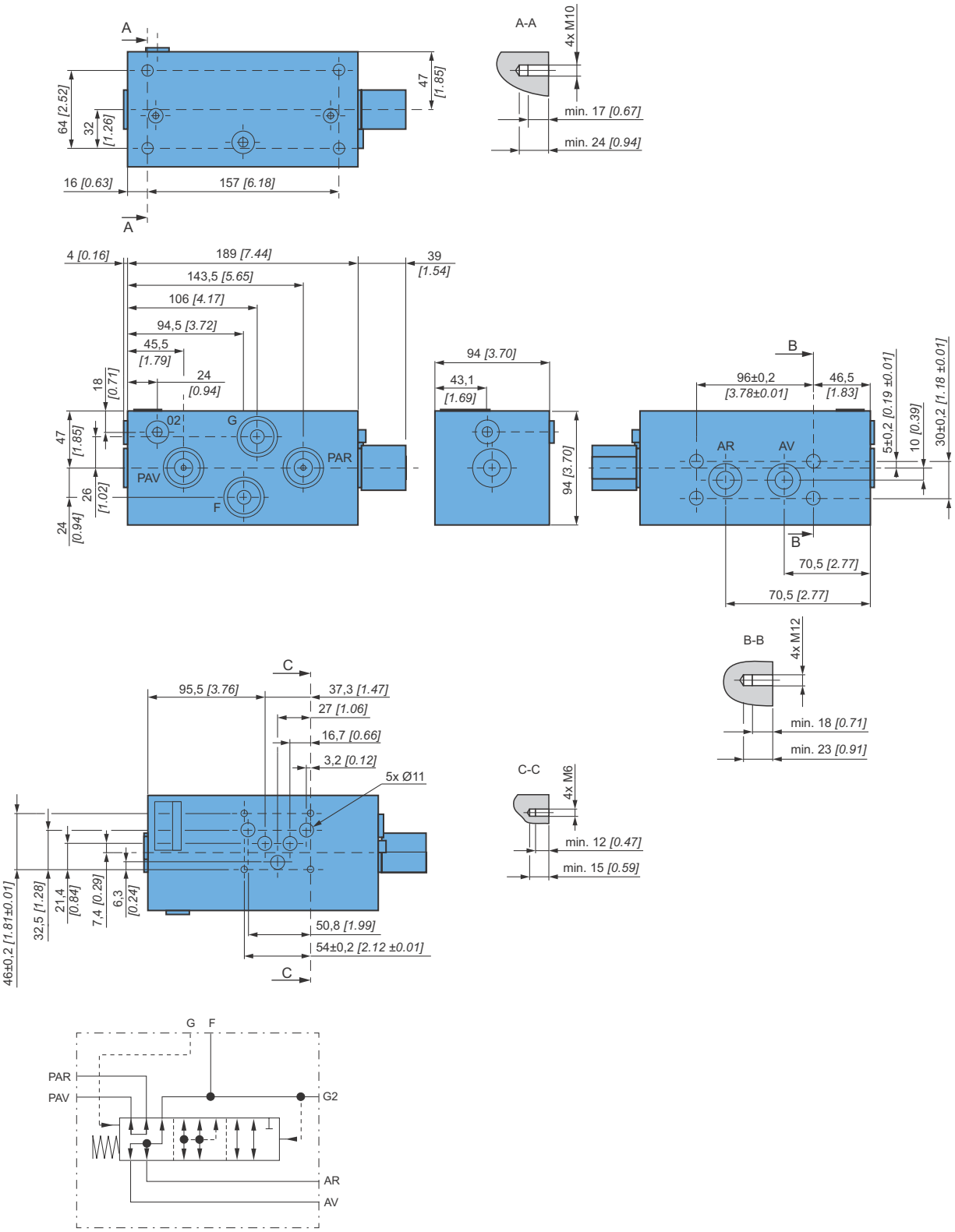

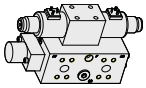

Dimensions with pilot valve (two positions)

V D F - H 1 5 - ☐ - 1 ☐ 2 - ☐☐☐ ☐☐ - ☐☐☐☐☐☐

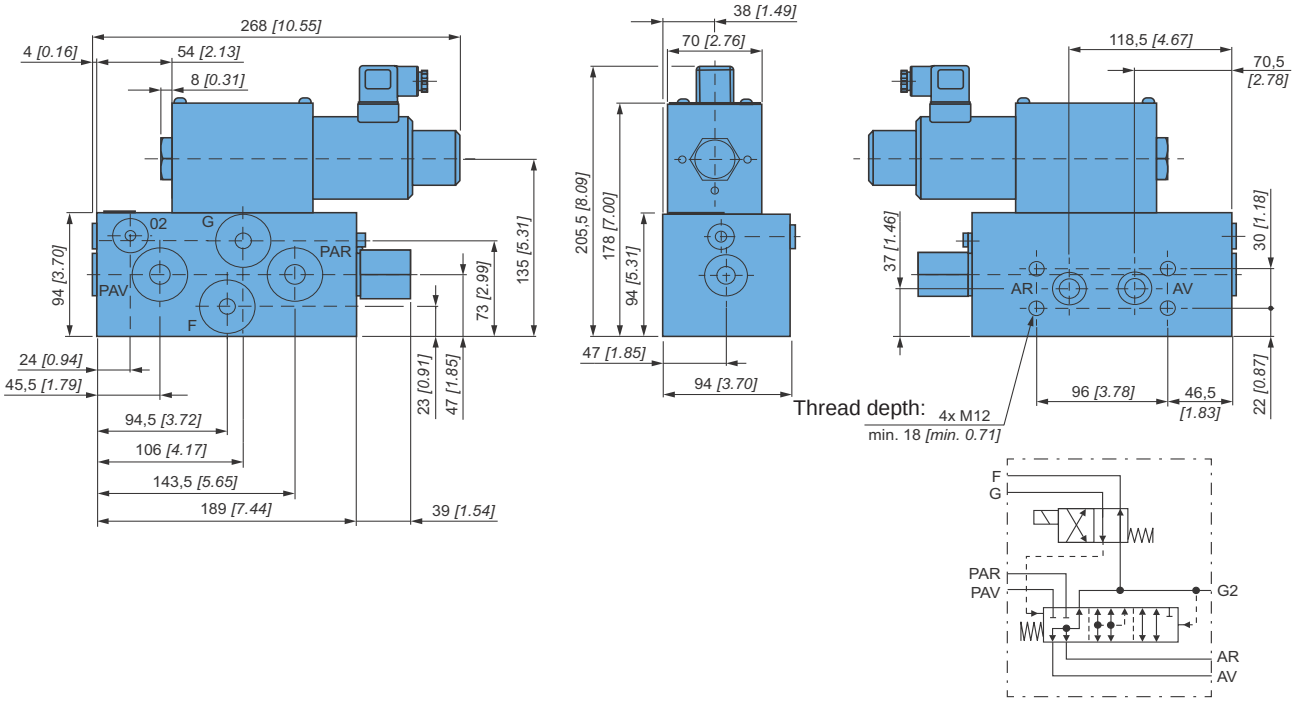

Dimensions with pilot valve (three positions)

V D F - H 1 5 - ☐ - 1 ☐ 3 - ☐☐☐ ☐☐ - ☐☐☐☐☐☐

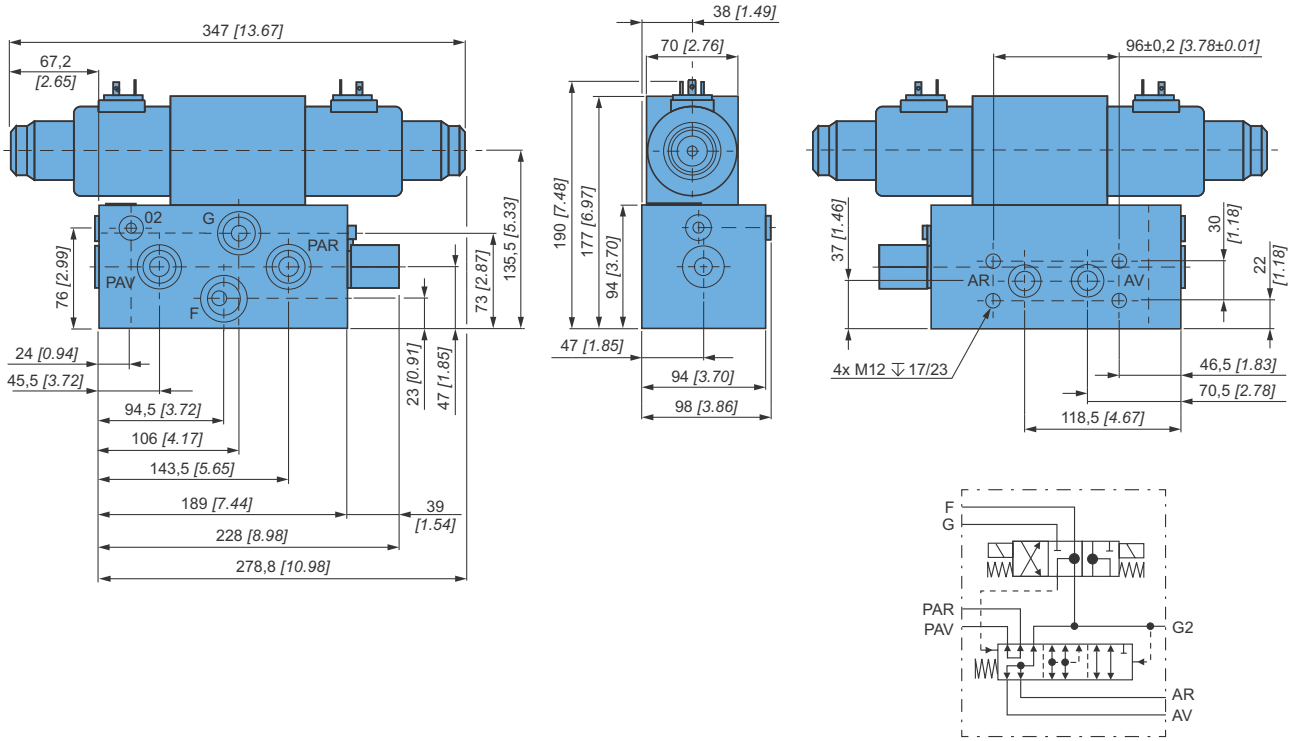

Hydraulic connections

Port	Function	Connections BSPP ISO 1179-1	Metric ISO 9974-1	UNF ISO 11926-1	Max. pressure Bar *[PSI]*	Min. pressure Bar *[PSI]*
PAV-PAR	Input forward - Input reverse forward	G27 (G3/4)	M27x2	1"1/16-12 UNF-2B	450 *[6 526]*	
AV-AR	Output forward - Output reverse forward	G27 (G3/4)	M27x2	1"1/16-12 UNF-2B	450 *[6 526]*	
F	Drain	G27 (G3/4)	M27x2	1"1/16-12 UNF-2B	50 *[725]*	
G	Pilot	G27 (G3/4)	M27x2	1"1/16-12 UNF-2B	50 *[725]*	10 *[145]*
G2	Pilot	G13 (G1/4)	M14x1,5	9/16"-18 UNF-2B	50 *[725]*	

Installation

Mounting position: Indifferent

	Class	(*) N.m *[lb.ft]*
4xM10	8.8	49 *[36]*

(*) As per standard DIN 912

Model code

A B C D E F G

1 2 3 1 2 3 1 1 2 3 1 2 3 1 2 1 2 3 4 5 6

V D F - H - - - -

Type

Valve	**V**
Direction	**D**
Free-Wheel	**F**

Operating pressure

High pressure - 450 Bar *[6 526 PSI]*	**H**

Flow

50 to 95 L/min *[13 to 25 GPM]*	**15**

By-pass pump

Without	**0**
With	**1**

Pilot valve

Without	**0**
With	**1**

Working ports

When C1=0	**0**
4 channels	**4**
3 channels	**3**

Number of positions

When C1=0	**0**
2 positions	**2**
3 positions	**3**

Voltage

Without	**0**
12 V	**1**
24 V	**2**
110 V	**3**

Current type

0	Without
D	DC
A	AC

Connector type

0	Without (connector w/o plug)*
1	Naked wires
2	Packard
3	Deutsch
4	Hirschmann
5	APM (6.3 x 0.8)

* Plug to be ordered separately

Pump/Motor connections

0	Without
3	ISO 1179-1 (BSPP)
4	ISO 9974-1 (Metric)
A	ISO 11926-1 (SAE)

Drain/Pilot connection

0	Without
3	ISO 1179-1 (BSPP)
4	ISO 9974-1 (Metric)
A	ISO 11926-1 (SAE)

Options

0	Without (spool type 14)
2	Spool type 2
9	Spool type 9
B	Zinc-chromated
D	Special painting
F	Customized*

* Further description on interface drawing

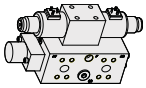

VDF H25

- Free-wheeling
- Heavy duty
- Reliable

Operation

The free-wheeling valve allows to disengage the hydraulic motor by allowing the pistons to return in cylinder-blocks and the motor to turn in freewheeling mode. It prevents contacts of camring and pistons at high speed.

Hydraulic symbol

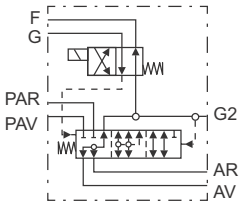

Features

Hydraulic		
Max. pressure	Bar *[PSI]*	*450 [6 526]*
Nominal flow range	L/min *[GPM]*	170 to 300 *[44.90 to 79.25]*
Min. control pressure	Bar *[PSI]*	10 *[145]*
Type of hydraulic connection	ISO 1179-1 (BSPP); ISO 11926-1 (UNF); ISO 6162 (Bride SAE); ISO 9974-1 (Metric)	
Mass • without pilot valve • with pilot valve: 2 positions • with pilot valve: 3 positions	kg *[lb]*	 32 *[70.55]* 38,5 *[84.88]* 39,3 *[86.64]*
Surface treatment		Zn plating Fe/Zn8/Cn/T2 (DIN 50979)
Fluid temperature	°C *[°F]*	-20 to +90 *[-4 to -200]*
Fluid viscosity	mm^2/s [ssu]	15 to 380 *[69.5 to 1 760]*
Fluid contamination	ISO 4406	18/16/13

Electrical		
Solenoid supply voltage	V direct	12/24V
	V alternative	110V
Solenoid duty cycle		Continuous
Max. ambient temperature	°C *[°F]*	70 *[158]*

Pressure drop

Measured at 20°C *[68°F]*

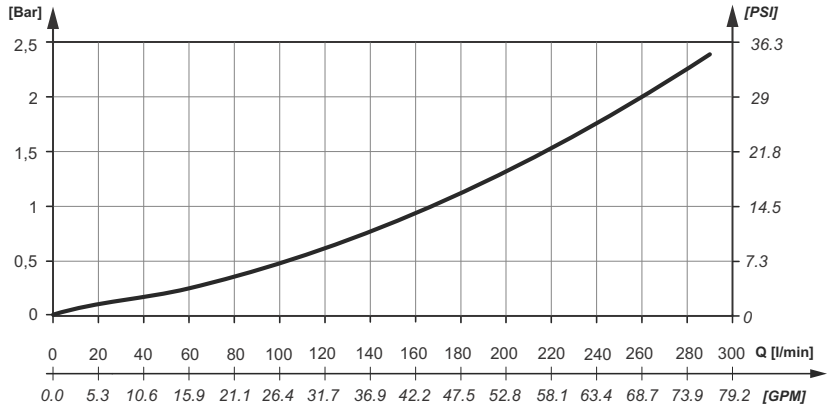

Dimensions without pilot valve

V	D	F	-	H	2	5	-		-	0	0	0	-						-						

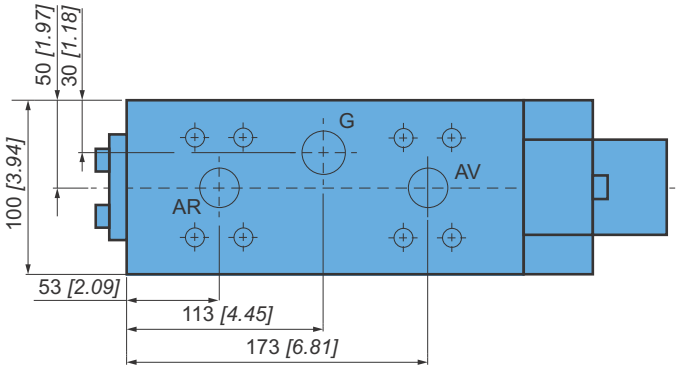

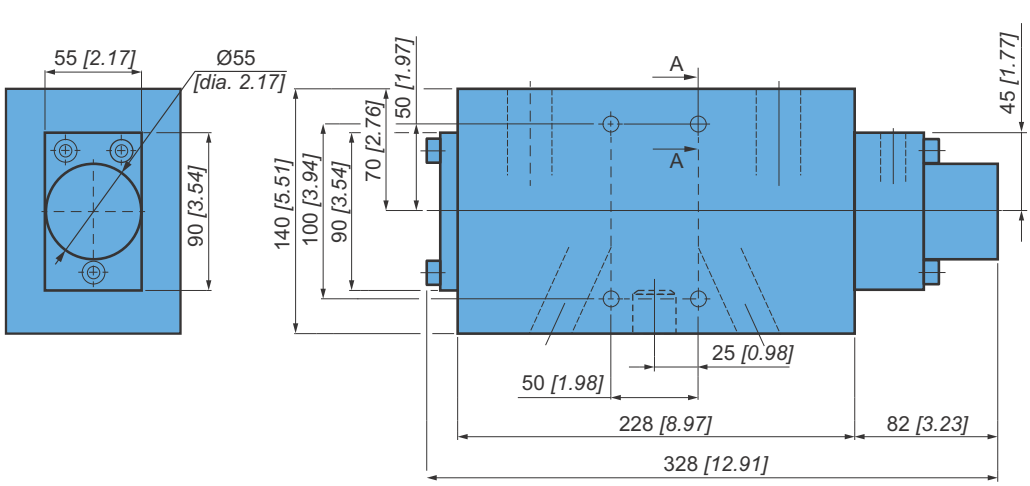

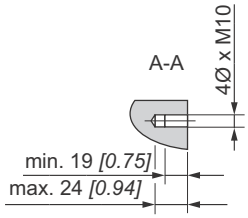

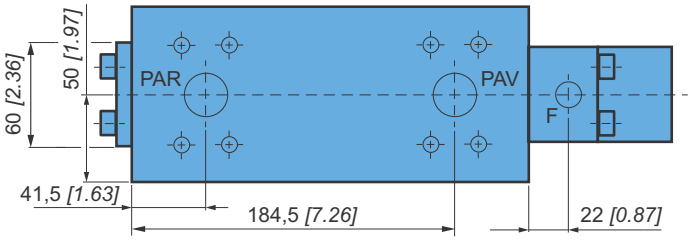

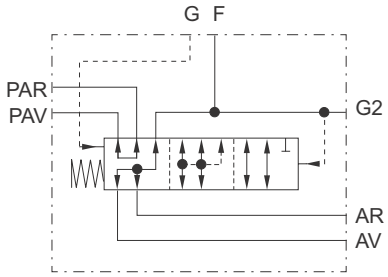

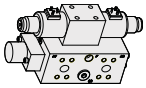

Dimensions with pilot valve (two positions)

V D F - H 2 5 - ☐ - 1 ☐ 2 - ☐☐☐ ☐☐ - ☐☐☐☐☐☐

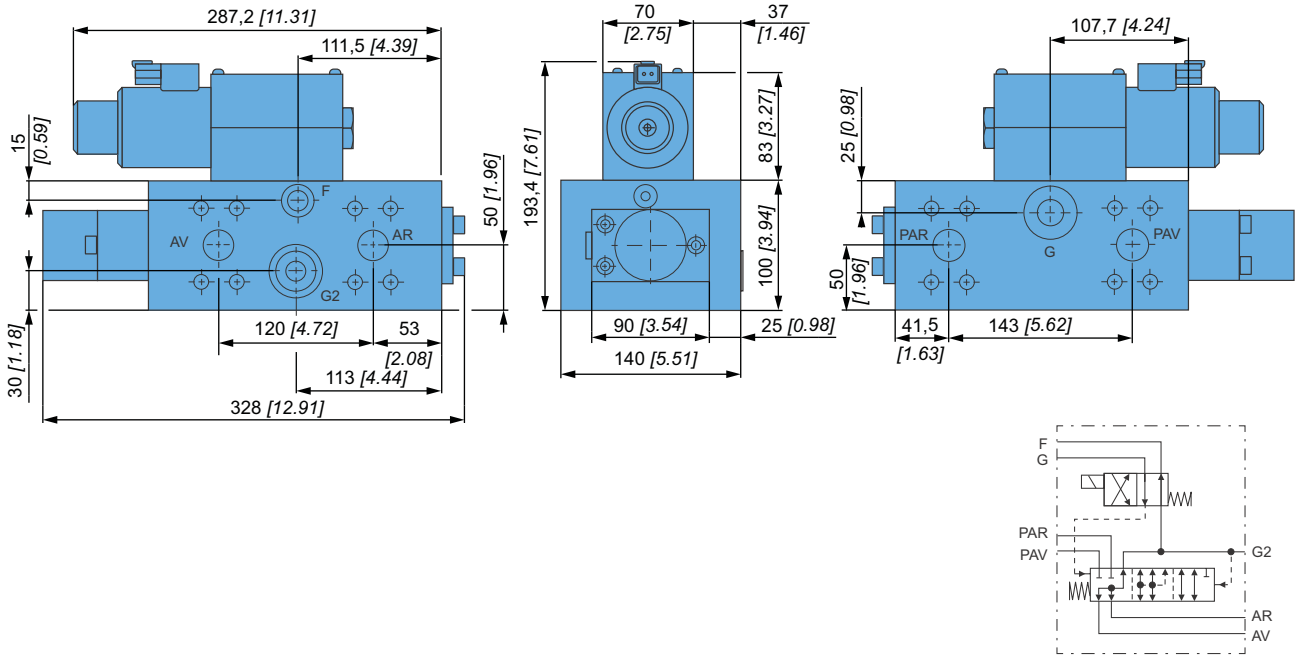

Dimensions with pilot valve (three positions)

V D F - H 2 5 - ☐ - 1 ☐ 3 - ☐☐☐ ☐☐ - ☐☐☐☐☐☐

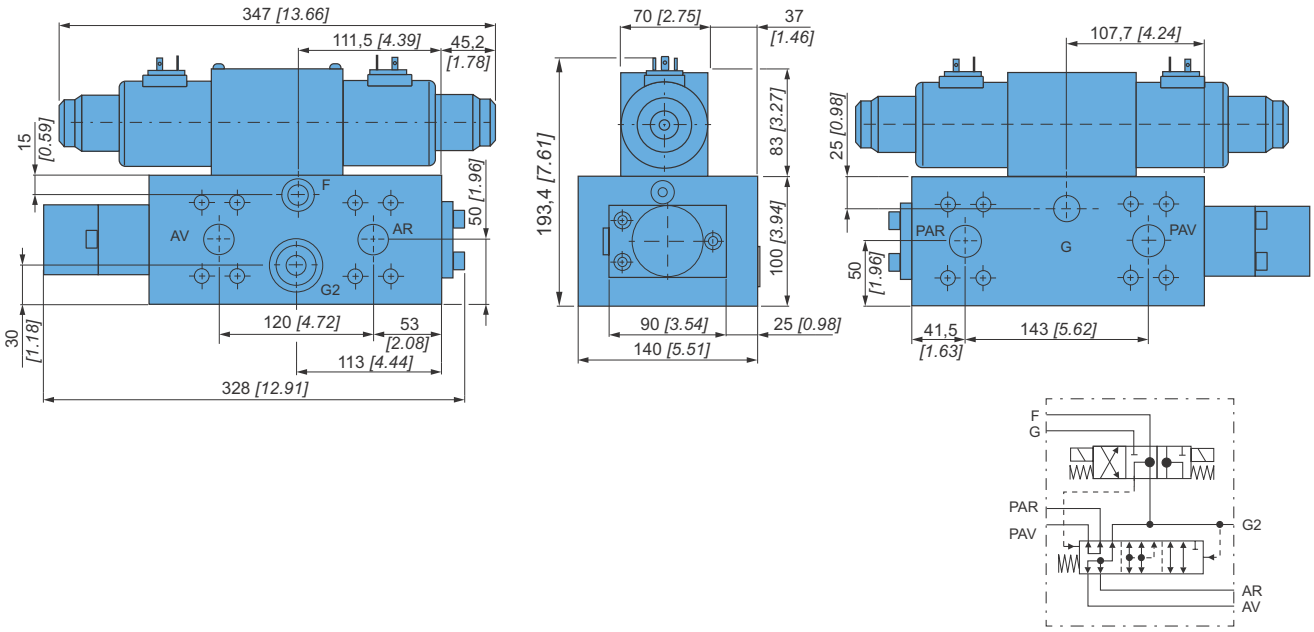

Hydraulic connections

Port	Function	Connections				Max. pressure Bar *[PSI]*	Min. pressure Bar *[PSI]*
		BSPP ISO 1179-1	**Bride SAE** ISO 6162	**Metric** ISO 9974-1	**UNF** ISO 11926-1		
PAV-PAR	Input forward - Input reverse forward	DN 25 PN400	DN 25 PN400	DN 25 PN400	DN 25 PN400	450 *[6 526]*	
AV-AR	Output forward- Output reverse forward	DN 25 PN400	DN 25 PN400	DN 25 PN400	DN 25 PN400	450 *[6 526]*	
F	Drain	G13 (G3/4)		M22x1,5	9/16”-18 UNF-2B	50 *[725]*	
G	Pilot	G27 (G3/4)		M22x1,5	1”1/16-12 UNF-2B	50 *[725]*	10 *[145]*
G2	Pilot	G27 (G1/4)		M22x1,5	1”1/16-12 UNF-2B	50 *[725]*	

Installation

Mounting position: Indifferent

	Class	N.m *[lb.ft]* (*)
4xM10	8.8	49 *[36]*

(*) As per standard DIN 912

Model code

A B C D E F G

1 2 3 1 2 3 1 1 2 3 1 2 3 1 2 1 2 3 4 5 6

V D F - H - - - - - -

Type

Valve	**V**
Direction	**D**
Free-Wheel	**F**

Operating pressure

High pressure - 480 Bar *[7 000 PSI]*	**H**

Flow

170 to 300 L/min *[44.9 to 79.25 GPM]*	**25**

By-pass pump

Without	**0**
With	**1**

Pilot valve

Without	**0**
With	**1**

Working ports

When C1=0	**0**
4 channels	**4**
3 channels	**3**

Number of positions

When C1=0	**0**
2 positions	**2**
3 positions	**3**

Voltage

Without	**0**
12 V	**1**
24 V	**2**
110 V	**3**

Current type

0	Without
D	DC
A	AC

Connector type

0	Without (connector w/o plug)*
1	Naked wires
2	Packard
3	Deutsch
4	Hirschmann
5	APM (6.3 x 0.8)

* Plug to be ordered separately

Pump/Motor connections

0	Without
3	ISO 1179-1 (BSPP)
4	ISO 9974-1 (Metric)
A	ISO 11926-1 (SAE)

Drain/Pilot connection

0	Without
1	ISO 6162 (Bride SAE)
3	ISO 1179-1 (BSPP)
4	ISO 9974-1 (Metric)
A	ISO 11926-1 (SAE)

Options

0	Without (spool type 14)
2	Spool type 2
9	Spool type 9
B	Zinc-chromated
D	Special painting
F	Customized*

* Further description on interface drawing

FLOW DIVIDERS

2-way Flow Divider 47

3-way and 4-way Flow Dividers 52

2 way Heavy duty Flow Divider 59

2-WAY FLOW DIVIDER

- **Modular**
- **Compact**
- **Energy efficient**

Operation

FD-M2 is a two-way medium-duty flow divider that assures parallel operation of wheels of the same axle or between different axles by dividing or combining the flow. It can operate in open or closed loop circuits. FD-M2 is equipped with normally opened by-pass that can be controlled electric or hydraulic.

If you have to add a flushing valve in a closed loop circuit equipped with a flow divider, you have to install the flushing valve between the pump and the flow divider.

Hydraulic symbol

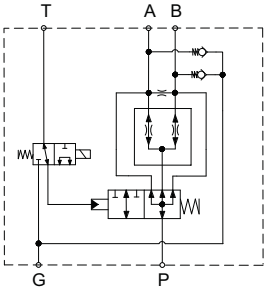

Features

Hydraulic		
Max. pressure	Bar *[PSI]*	420 *[6 000]*
Max. flow	L/min *[GPM]*	150 *[39.6]*
Dividing/combining accuracy		from +/- 5% to +/- 10% according to flow range
Type of hydraulic connections		ISO 1179-1 (BSPP); ISO 11926-1 (UNF)
Weight	kg *[lbs]*	7,9 *[17.4]*
Surface treatment		Zn plating Fe//Zn8//Cn//T2 (DIN 50979)
Fluid temperature	°C *[°F]*	-20 to +90 *[-4 to +200]*
Fluid viscosity	mm²/s *[SSU]*	15 to 380 *[69.5 to 1 760]*
Fluid contamination	ISO 4401:1999	max 20/18/14

Electrical		
Solenoid supply voltage	V DC	12, 24; ±10%
Solenoid power consumption	W	17,2 (12V DC), 16,6 (24V DC)
Solenoid duty cycle		100% ED
Max. ambient temperature	°C *[°F]*	70 *[158]*

Pressure drop

Measured at 50 °C *[122 °F]* and viscosity of 32 mm^2/s *[148 SSU]*.

By-pass mode

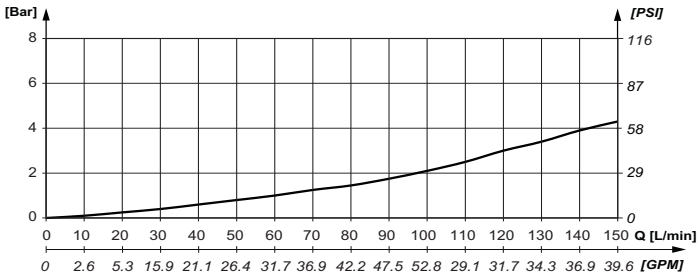

Divider mode

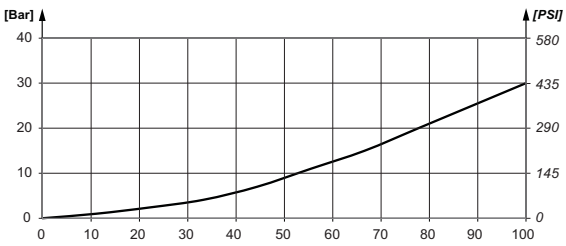

% of max input flow

Installation

Mounting position: Indifferent

	Class	N.m *[lb.ft]* (*)
2xM10	8.8	49 *[36]*

(*) As per standard DIN 912

Dimensions with electric by-pass control

F D M 2 - ☐☐☐☐ - E☐☐☐ - ☐☐☐ - ☐☐☐ - ☐☐☐

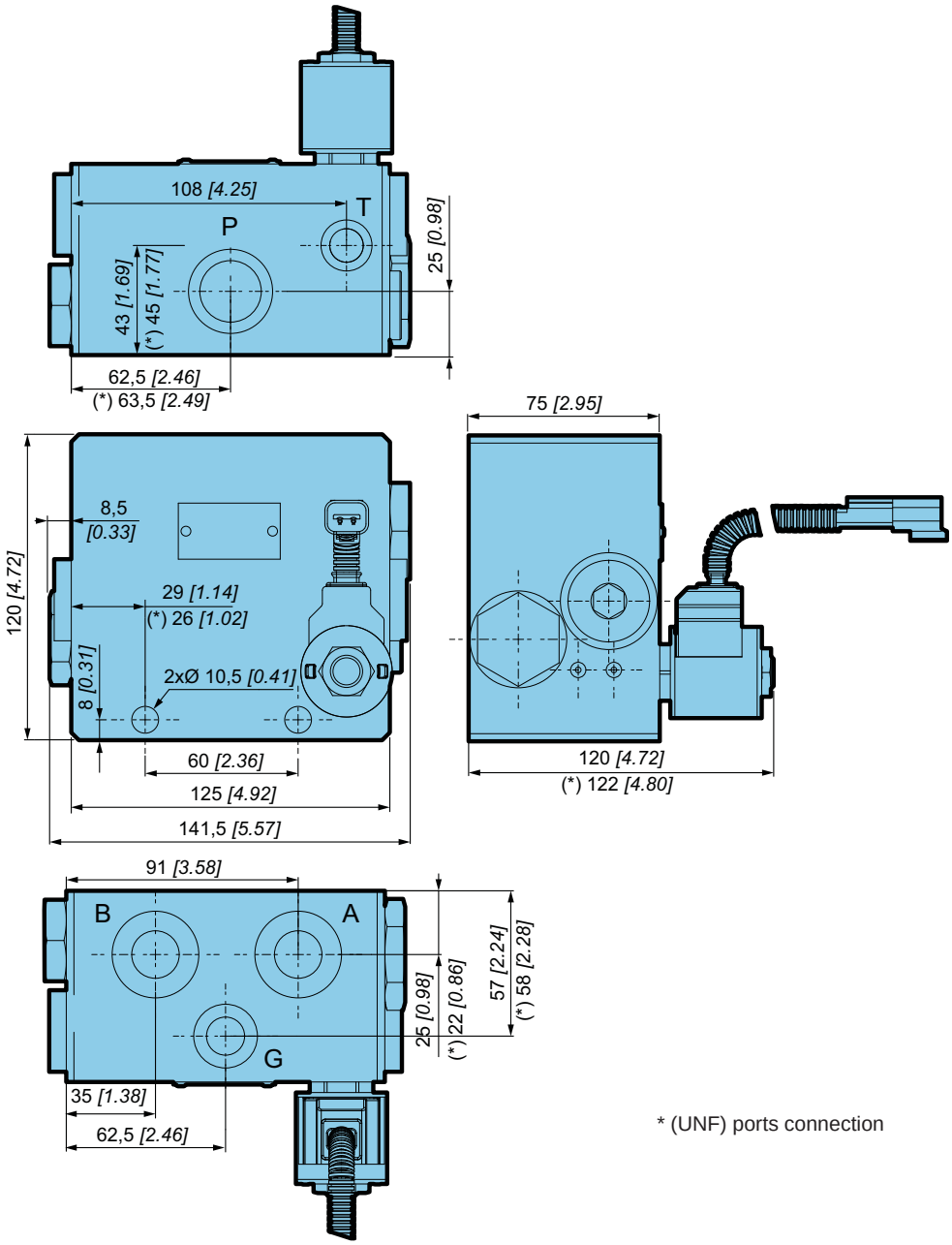

* (UNF) ports connection

Hydraulic schemes

Electric by-pass with charge check valves

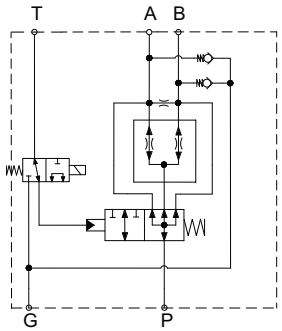

Electric by-pass control with charge and relief valves

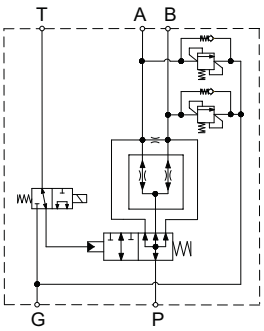

Dimensions with hydraulic by-pass control

F D M 2 - ☐☐☐☐ - H☐☐☐ - ☐☐☐ - ☐☐☐ - ☐☐☐

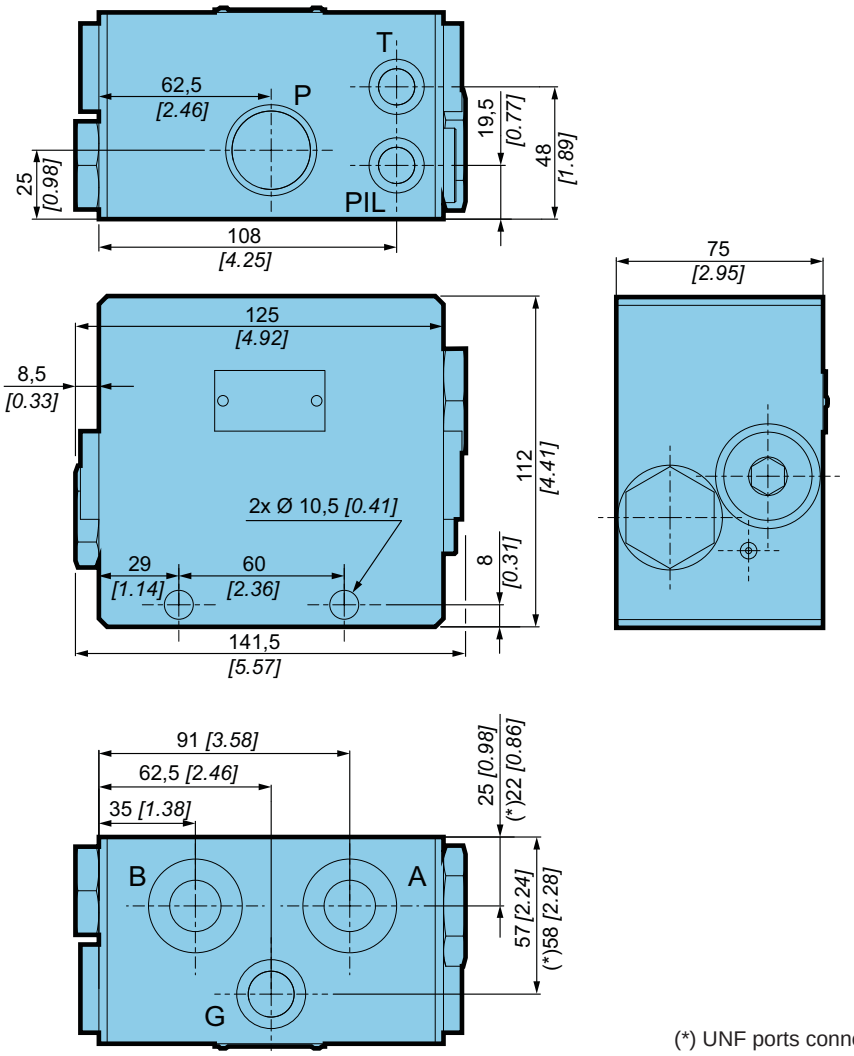

(*) UNF ports connection

Hydraulic schemes

Hydraulic by-pass with charge check valves

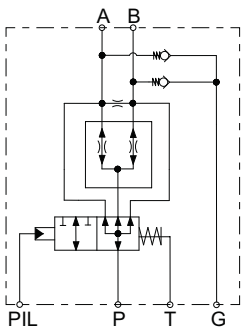

Hydraulic by-pass control with charge and relief valves

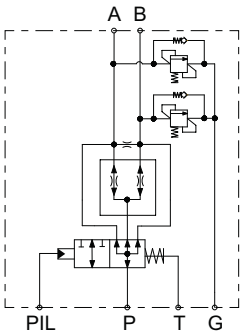

Hydraulic connections

Port	Function	Connection		Max. pressure Bar *[PSI]*	Min. pressure Bar *[PSI]*
		BSPP ISO 1179-1	UNF ISO 11926-1		
P	Main flow inlet-outlet	3/4“	1“1/16-12 UNF-2B	420 *[6 000]*	
A	Divided flow outlet - combined flow inllet	1/2“	7/8“-14 UNF-2B	420 *[6 000]*	
B					
G	Charge flow inlet	3/8“	3/4“-16 UNF-2B	50 *[725]*	8 *[116]*
PIL	Pilot flow inlet (hydraulic by-pass only)	1/4“	9/16“-18 UNF-2B	50 *[725]*	8 *[116]*
T	Drain	1/4“	9/16“-18 UNF-2B	5 *[73]*	

Model code

F D M 2 - 1 ☐ ☐ ☐ - ☐ 0 ☐ ☐ - ☐ ☐ ☐ - ☐ ☐ ☐ - ☐ ☐ ☐

By-pass flow

Without by-pass	**0**
to 150 L/min *[39,6 GPM]*	**1**

Division ratio (flow split %)

50 - 50	**A**
70 - 30	**B**
60 - 40	**D**

Max. flow always goes through port A.

Flow range in division mode

20-60 L/min *[5.3-15.9 GPM]*	**06**
25-90 L/min *[6.6-23.8 GPM]*	**09**
35-120 L/min *[9.2-31.7 GPM]*	**12**
55-150 L/min *[14.6-39.6 GPM]*	**15**

Optimal work is located between 40% and 60% of max. dedicated flow.

By-pass control

Electric control	**E**
Hydraulic control	**H**
Without	**A**

Auxilliaries

Without	**0**

Transfer restrictor diameter

Without	**00**
0,6 mm *[0.024 in]*	**06**
0,8 mm *[0.032 in]*	**08**
1,0 mm *[0.039 in]*	**10**

Contact us for other diameters.

Options

Without	**0**
By-pass - normally closed	**1**
Zn plating (STANDARD)	**B**
Special painting	**D**
Specific name plate	**P**
Customized*	**F**

* Further description on interface drawing

Electric connector

0	Without
3	Deutsch DT04-2P
4	DIN 43650
5	AMP Jr. Timer

Voltage

A	Without solenoid
1	12 V DC
2	24 V DC

Hydraulic connections

A	UNF ports
3	BSPP ports

Charge check valves

A	Without
B	With

Relief valves setting*

00	Without
30	300 Bar *[4 351 PSI]*
35	350 Bar *[5 076 PSI]*
38	380 Bar *[5 511 PSI]*
40	400 Bar *[5 801 PSI]*

*ΔP between A (B) and G at 10 L/min *[2.64 GPM]*

3-WAY AND 4-WAY FLOW DIVIDERS

- **Modular**
- **Compact**
- **Energy efficient**

Operation

FD-M4 (FD-M3) is a four (three) way medium-duty flow divider that assures parallel operation of wheels of the same axle or between different axles by dividing or combining the flow. It can operate in open or closed loop circuits. FD-M4 (FD-M3) is equipped with normally opened by-pass that can be controlled electric or hydraulic.

Hydraulic symbol

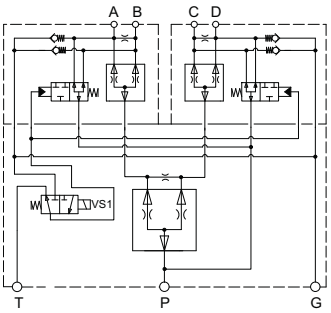

Features

Hydraulic		FD-M3	FD-M4
Max. pressure	Bar *[PSI]*	350 *[5 075]*	420 *[6 000]*
Max. pressure (with high pressure relief valve)	Bar *[PSI]*	350 *[5 075]*	
Max. flow	L/min *[GPM]*	150 *[39.6]*	
Dividing/combining accuracy		from +/- 5% to +/- 10% according to flow range	
Type of hydraulic connections		ISO 1179-1 (BSPP)	ISO 1179-1 (BSPP) ISO 11926-1 (UNF)
Weight	kg *[lbs]*	13 *[28.6]*	15 *[33.6]*
Surface treatment		Zn plating Fe//Zn8//Cn//T2 (DIN 50979)	
Fluid temperature	°C *[°F]*	-20 to +90 *[-4 to +200]*	
Fluid viscosity	mm²/s *[SSU]*	15 to 380 *[69.5 to 1 760]*	
Fluid contamination	ISO 4401:1999	max 20/18/14	

Electrical		FD-M3	FD-M4
Solenoid supply voltage	V DC	12, 24; ±10%	
Solenoid power consumption	W	17,2 (12V DC), 16,6 (24V DC)	
Solenoid duty cycle		100% ED	
Max. ambient temperature	°C *[°F]*	70 *[158]*	

Pressure drop

Measured at 50 °C *[122 °F]* and viscosity of 32 mm^2/s *[148 SSU]*.

By-pass mode FD-M3

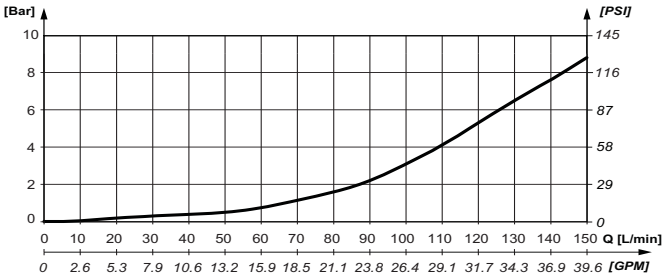

By-pass mode FD-M4

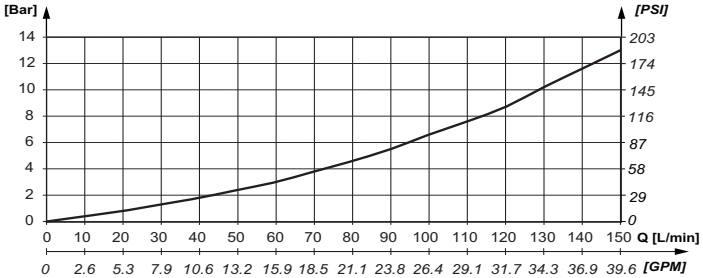

Dimensions

F D M 3 - ☐☐☐☐ - ☐☐☐☐ - ☐☐☐ - ☐☐☐ - ☐☐☐

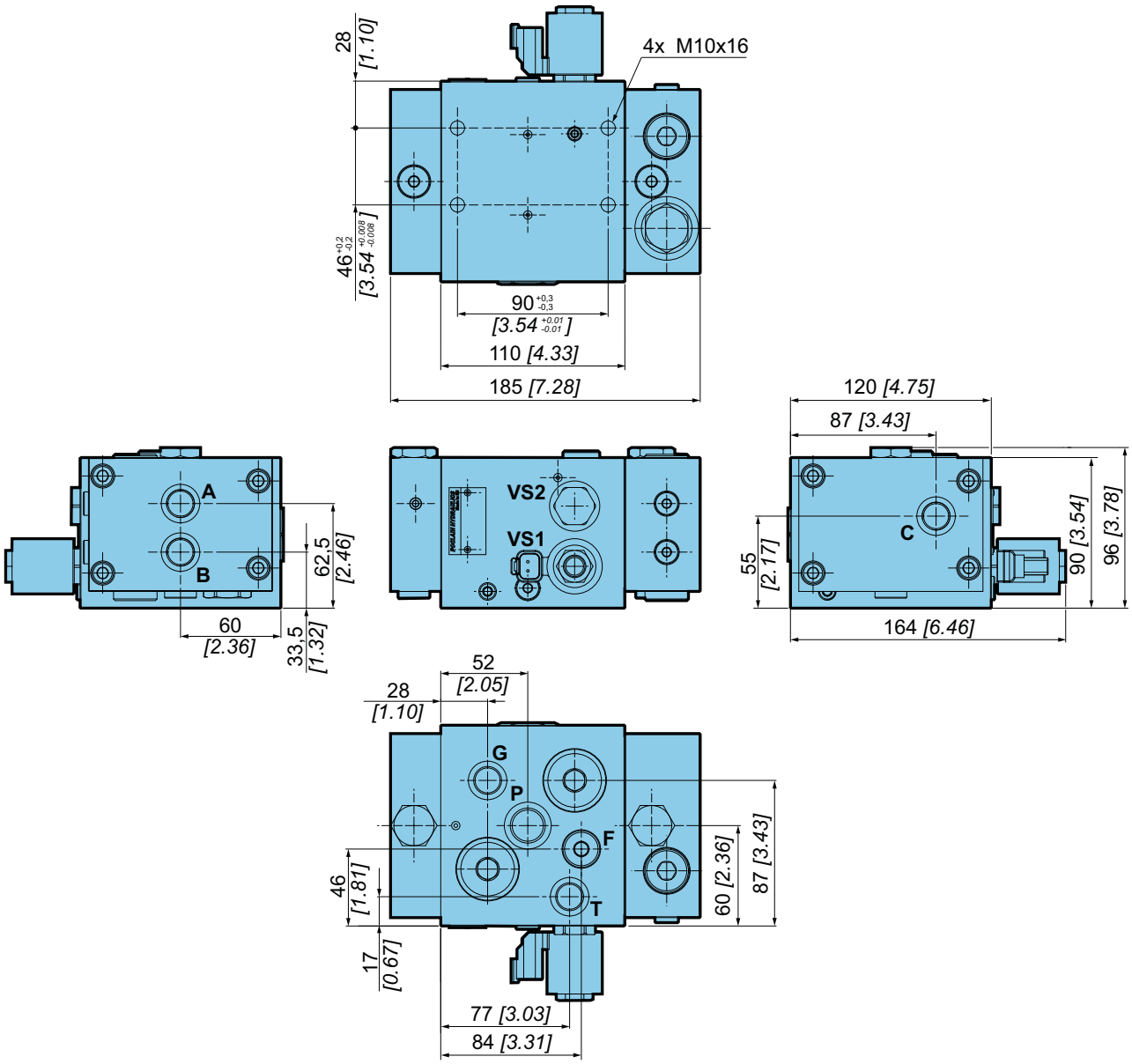

Hydraulic scheme - Electric by-pass control with charge check valve

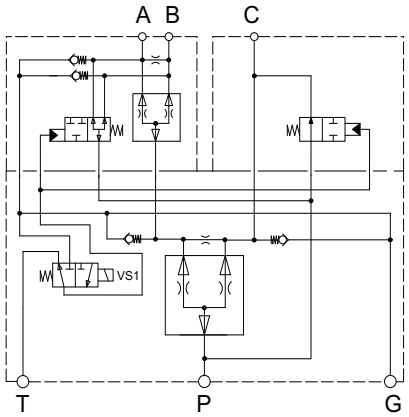

Dimensions with pressure relief valve

F D M 4 - ☐☐☐☐ - ☐☐☐☐ - 3 5 ☐ - ☐☐☐ - ☐☐☐

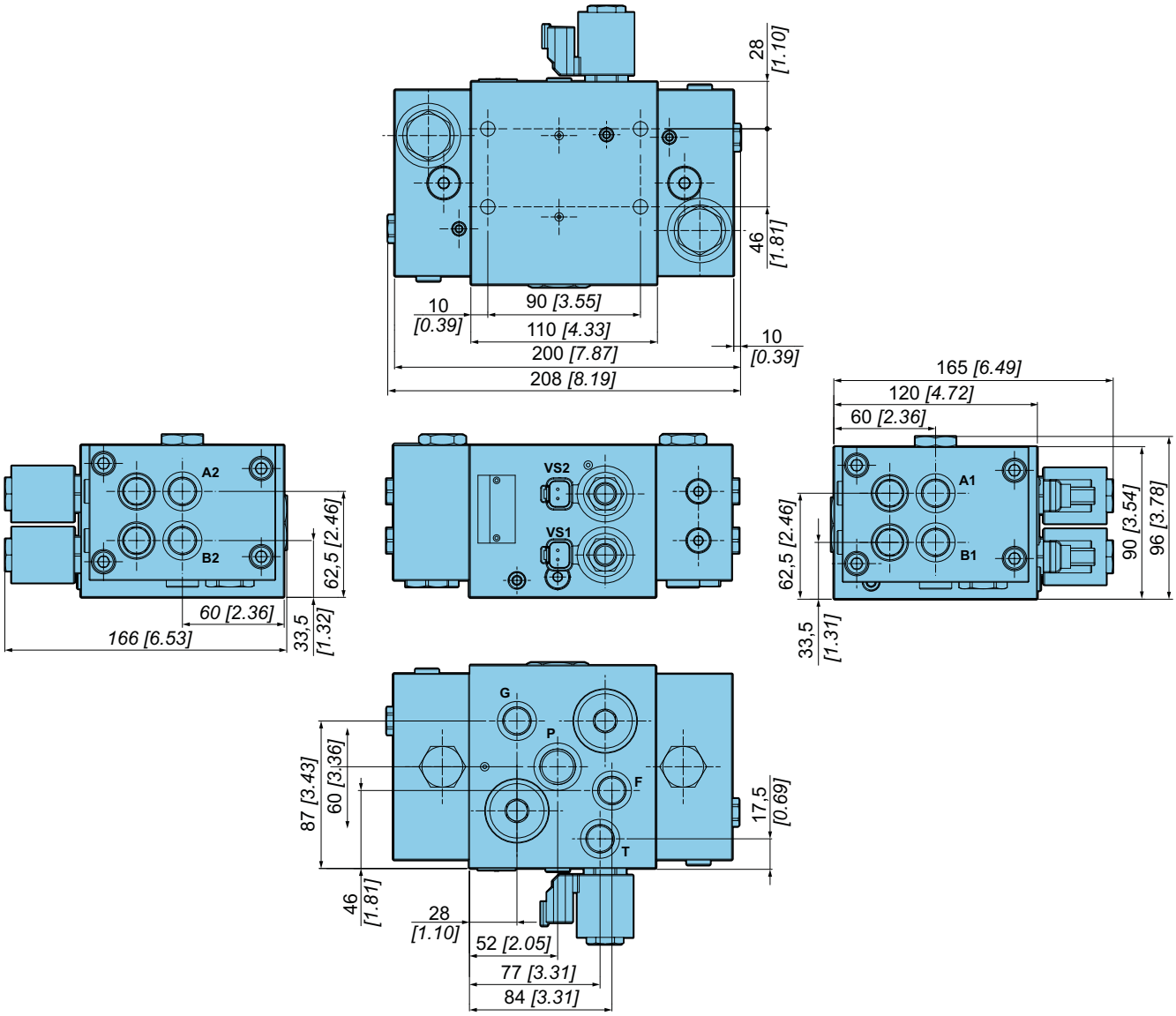

Hydraulic scheme - Hydraulic by-pass control with charge check and relief valves

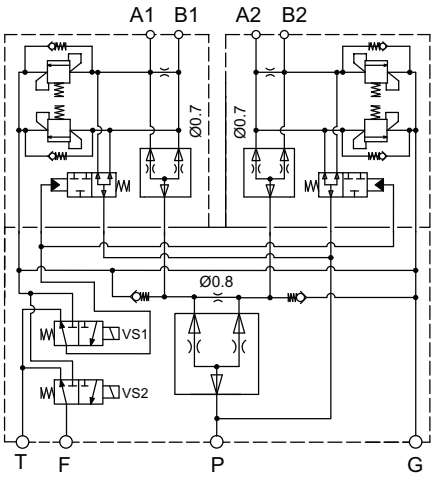

Designed for max. pressure 350 Bar *[5 076 PSI].*

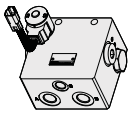

Dimensions without pressure relief valve

F D M 4 - ☐☐☐☐ - H ☐☐☐ - 0 0 ☐ - ☐☐☐ - ☐☐☐

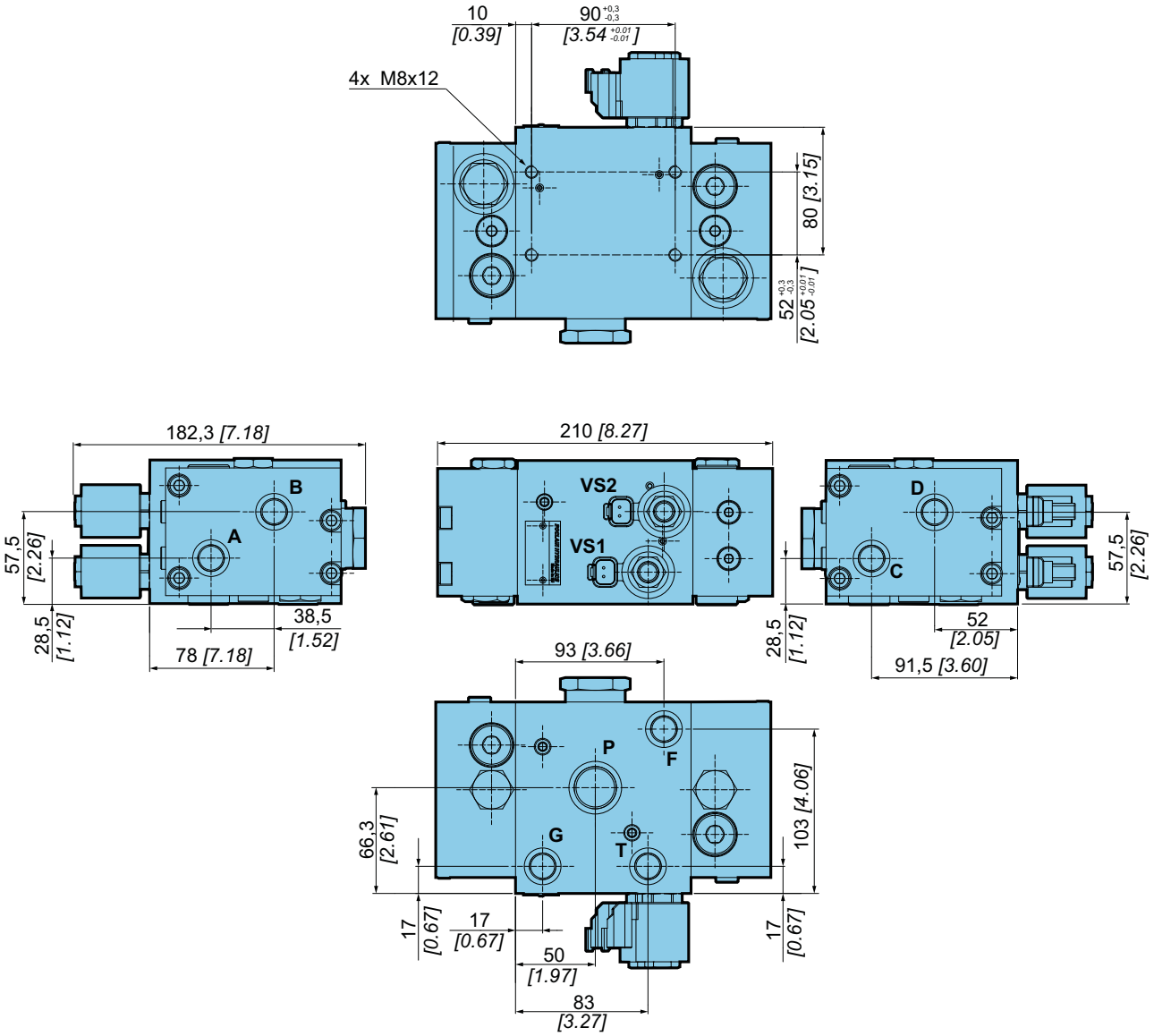

Hydraulic scheme - Electric by-pass control without charge check valve

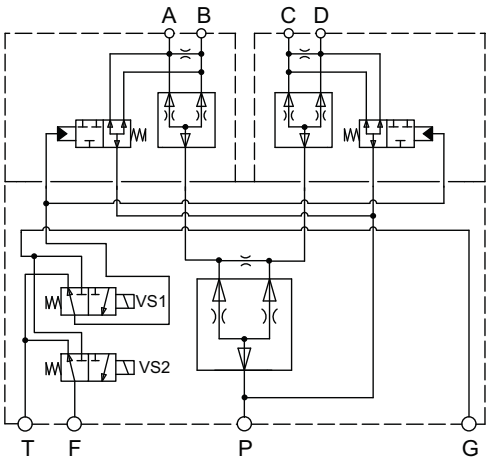

Hydraulic connections

FD-M3 and FD-M4 with pressure relief valve

Port	Function	Connection BSPP ISO 1179-1	Max. pressure Bar *[PSI]*	Min. pressure Bar *[PSI]*
P	Main flow inlet-outlet	1/2”	350 *[5 075]*	
A	Divided flow outlet - combined flow inllet	3/8”	350 *[5 075]*	
B				
G	Charge flow inlet	3/8”	50 *[725]*	*8 [116]*
T	Drain	3/8”	5 *[73]*	

FD-M4

Port	Function	Connection BSPP ISO 1179-1	Connection UNF ISO 11926-1	Max. pressure Bar *[PSI]*	Min. pressure Bar *[PSI]*
P	Main flow inlet-outlet	3/4”	1”1/16-12 UNF-2B	420 *[6 000]*	
A	Divided flow outlet - combined flow inllet	3/8”	3/4”-16 UNF-2B	420 *[6 000]*	
B					
G	Charge flow inlet	3/8”	3/4”-16 UNF-2B	50 *[725]*	*8 [116]*
T	Drain	3/8”	3/4”-16 UNF-2B	5 *[73]*	

Installation

Type		Class	(*) N.m *[lb.ft]*
FD-M3	4xM10	8.8	49 *[36]*
FD-M4 (1)	4xM10	8.8	49 *[36]*
FD-M4	4xM8	10.9	36 *[27]*

(*) As per standard DIN 912

(1) with pressure relief valve

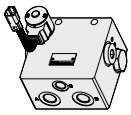

Model code

A	B	C	D	E	F	G
1 2	1 2	1 2 3 4	1 2 3 4	1 2 3	1 2 3	1 2 3
F D	M	-	-	-	-	-

Number of outlets

4 outlets	**4**
3 outlets	**3**

By-pass flow

Without by-pass	**0**
to150 L/min *[39.6 GPM]*	**1**

Division ratio (flow split %)

25-25-25-25	**2**
30-30-20-20	**3**
33.5-33.5-16.5-16.5	**4**
33-33-33	**B***

*Division ratio available only for FD-M3

Max. flow always goes through port A.

Flow range in division mode*

15-60 L/min *[3.9-15.9 GPM]*	**06****
23-90 L/min *[5.3-23.8 GPM]*	**09****
20-60 L/min *[5.3-15.9 GPM]*	**06**
30-90 L/min *[7.9-23.8 GPM]*	**09**
35-120 L/min *[9.2-31.7 GPM]*	**12**

* Input Q = code x10 (FD-M4 max=120L/min *[31,7 GPM]*; FD-M3 max=90 L/min *[23.8 GPM]*)

** Flow range only available for FD-M3

Optimal work is located between 40% and 60% of max. dedicated flow.

By-pass control

Electric control	**E**
Without	**A**

Auxilliaries

Without	**0**
With solenoid (pilot valve)	**1**

Transfer restrictor diameter

Without	**00**
Ø 0,8 mm *[0.0315 in]* Ø 0,7 mm *[0.0275 in]* Ai-Bi	**AB**

Contact us for other diameters.

Options

Without	**0**
By-pass - normally closed	**1**
ZN-plating (standard)	**B**
Special painting	**D**
Specific name plate	**P**
Customized*	**F**

* Further description on interface drawing

Electric connector

0	Without
3	Deutsch DT04-2P
4	DIN 43650
5	AMP Jr. Timer

Voltage

A	Without solenoid
1	12 V DC
2	24 V DC

Hydraulic connections

A	UNF ports*
3	BSPP ports

* Hydraulic connections only available for FD-M4 without pressure relief valve

Charge check valves

A	Without
B	With

Relief valves setting*

00	Without
30	300 Bar *[4 351 PSI]*
35	350 Bar *[5 076 PSI]*

*ΔP between A (B) and G at 10 L/min *[2.6 GPM]*

2 WAY HEAVY DUTY FLOW DIVIDER

- **Modular**
- **Compact**
- **Energy efficient**

FD-H2 with auxiliaries

FD-H2 without auxiliaries

Operation

FD-H2 is a two way heavy-duty flow divider that assures parallel operation of wheels of the same axle and/or between different axles by dividing or combining flow. It can be operated in open or closed loop circuits. FD-H2 is equipped with normally opened by-pass that can be controlled electrically or hydraulically.

If you have to add a flushing valve in a closed loop circuit equipped with a flow divider, you have to install the flushing valve between the pump and the flow divider.

Hydraulic symbol

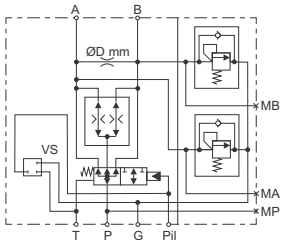

Features

Hydraulic		FD-H2-1	FD-H2-2
Max. pressure	Bar *[PSI]*	500 *[7 251]*	
Max. flow in bypass mode	L/min *[GPM]*	200 *[52.8]*	300 *[79.3]*
Max. flow in dividing/combining mode	L/min *[GPM]*	150 *[39.6]*	200 *[52.8]*
Dividing/combining accuracy		+/- 5% at 100% nominal flow +/- 7% at 50% nominal flow +/- 12% at 20% nominal flow	
Type of hydraulic connections		UNF ISO 11926-1 / BSPP ISO 1179-1	
Weight (based on codification)	kg *[lbs]*	from 14,5 *[31.9]* to 19,2 *[42.39]*	
Fluid temperature	°C *[°F]*	-20 to +90 *[-4 to +200]*	
Fluid viscosity	mm²/s *[SSU]*	9 to 500 *[41.7 to 2 316]*	
Fluid contamination	ISO 4401:1999	max 20/18/14	
Electrical		**FD-H2-1**	**FD-H2-2**
Solenoid supply voltage	V DC	12, 24; ±10%	
Solenoid power consumption	W	17,2 (12V DC); 16,6 (24V DC)	
Solenoid duty cycle		100% ED	
Max. ambient temperature	°C *[°F]*	70 *[158]*	

Pressure drop

Measured at 50 °C *[122 °F]* and viscosity of 32 mm²/s *[148 SSU]*.

By-pass mode FD-H2 (up to 200L/min *[52.8 GPM]*)

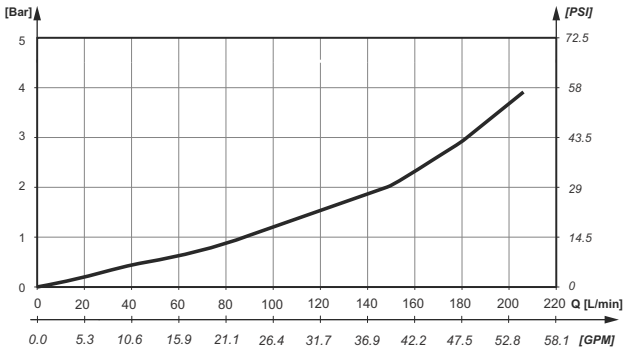

By-pass mode FD-H2 (up to 300l/min *[79.3 GPM]*)

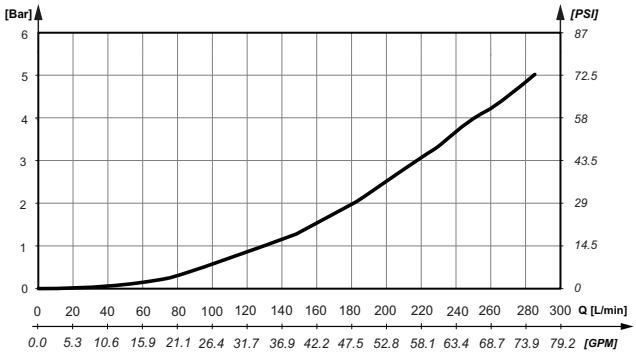

Hydraulic schematic

Electric by-pass

Without auxiliaries and with charge check valves

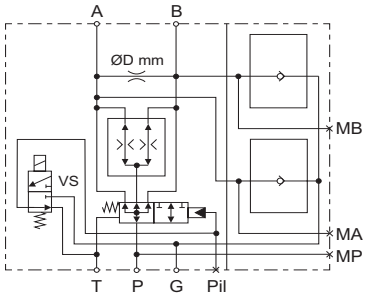

Without auxiliaries and with charge check valves and pressure relief valves

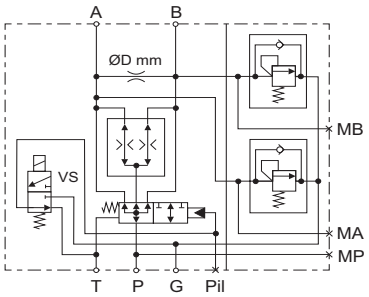

With auxiliaries and charge check valves

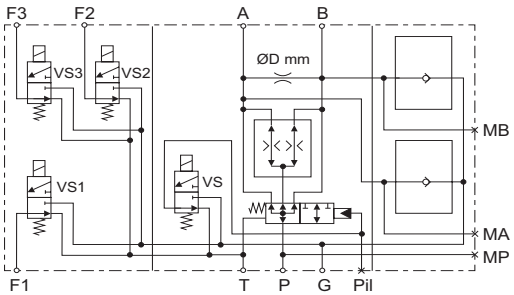

With auxiliaries and with charge check valves and pressure relief valves

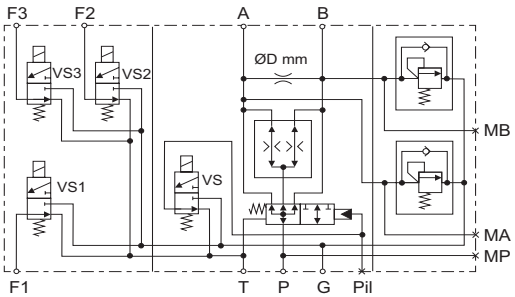

Hydraulic by-pass

Without auxiliaries and with charge check valves

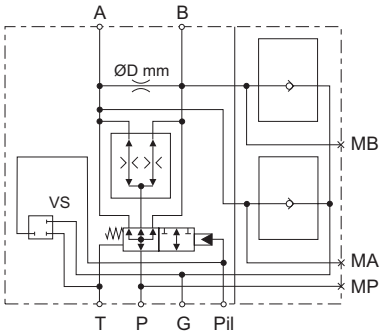

Without auxiliaries and with charge check valves and pressure relief valves

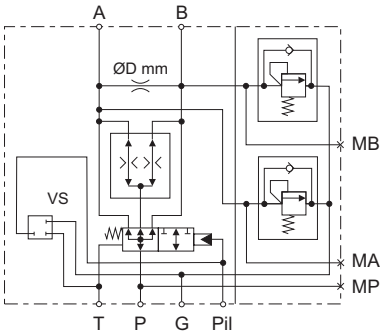

With auxiliaries and charge check valves

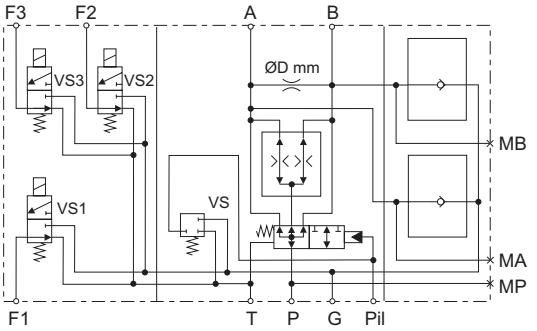

With auxiliaries and with charge check valves and pressure relief valves

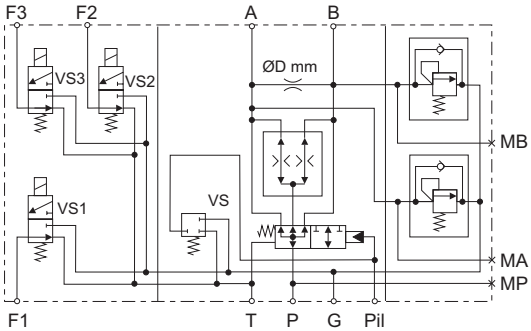

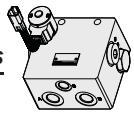

FD-H2 Hydraulic Bypass overall dimension without auxiliaries and with charge check valve

F D - H 2 ☐☐☐☐ H 0 ☐☐ 0 0 B ☐☐☐ ☐☐☐

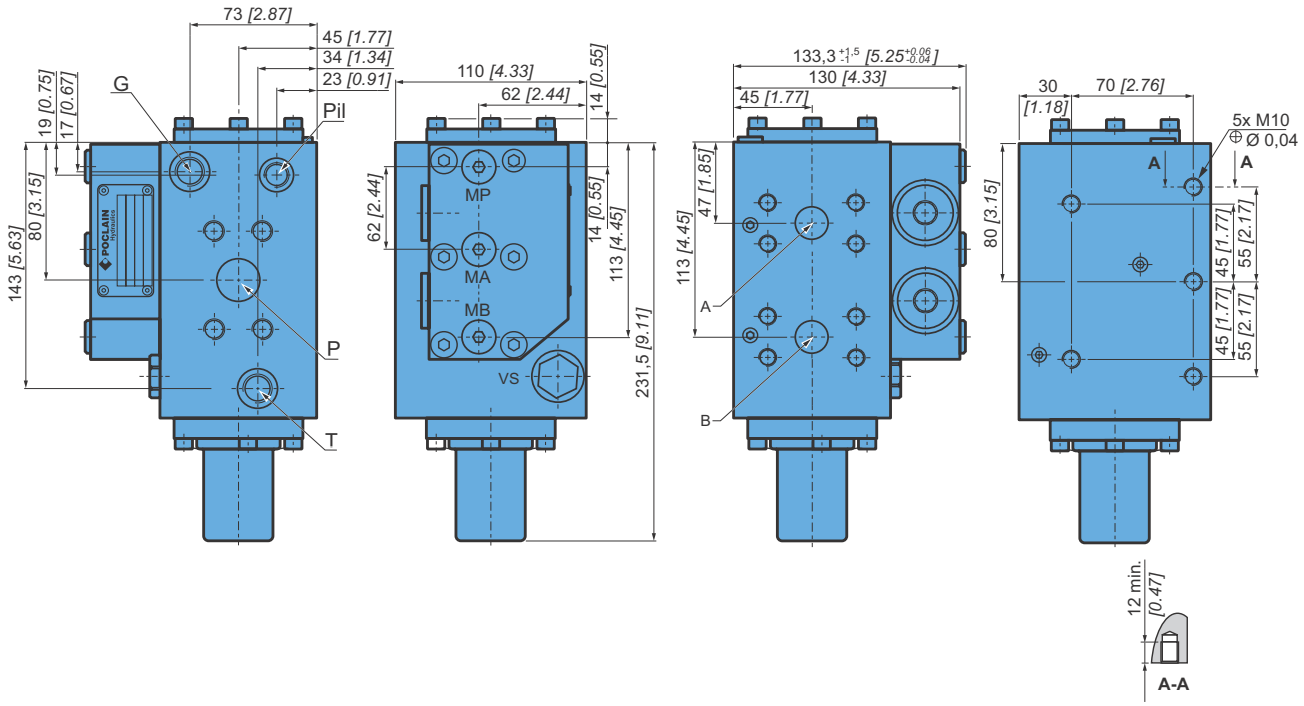

FD-H2 Hydraulic Bypass overall dimension with auxiliaries and charge check valve

F D - H 2 ☐☐☐☐ H 1 ☐☐ 0 0 B ☐☐☐ ☐☐☐

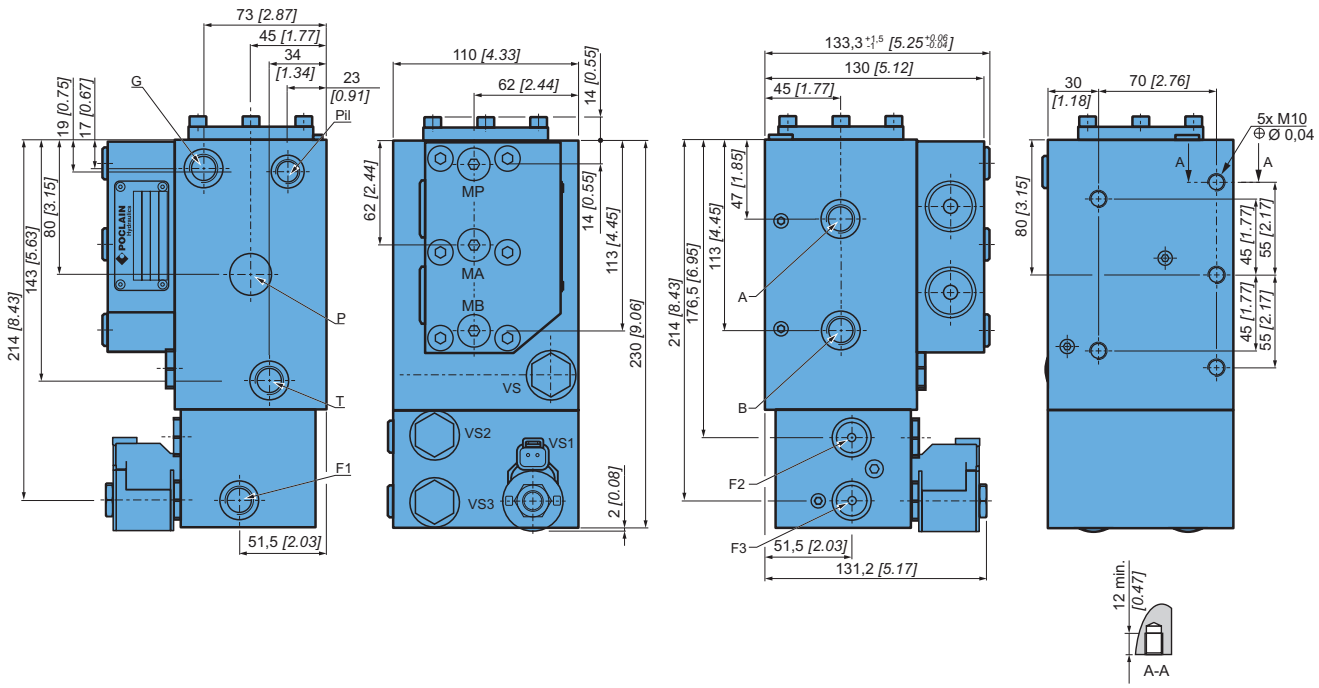

Change on dimensions based on option

With charge check and pressure relief valve

F D - H 2 ☐☐☐☐ ☐☐☐☐ 3 5 B ☐☐☐ ☐☐☐

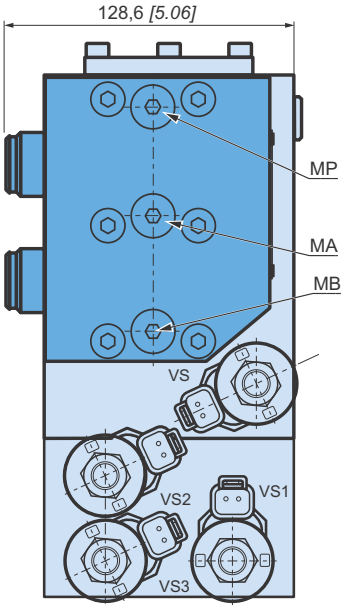

Electric by-pass

F D - H 2 ☐☐☐☐ E ☐☐☐ ☐☐☐ ☐☐☐ ☐☐☐

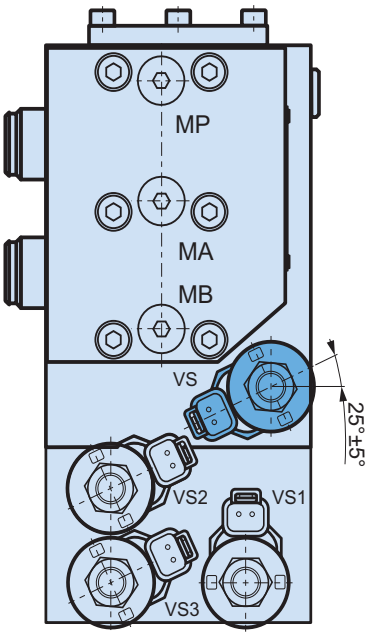

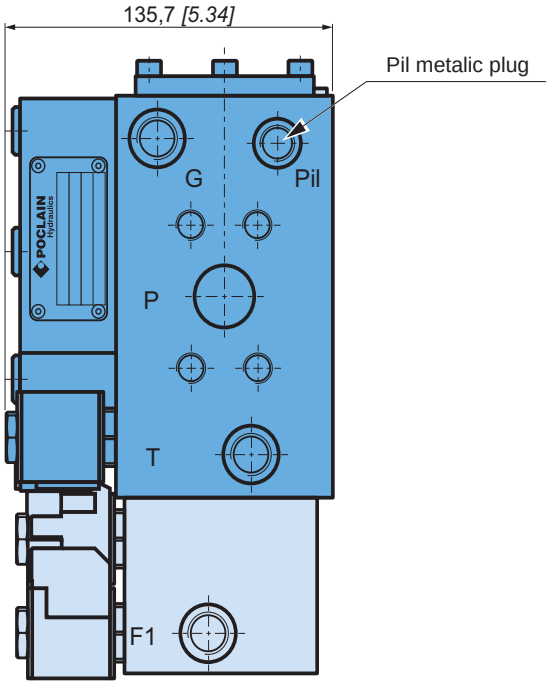

Change on dimensions based on option

Connector angular orientation

Deutsch connectors

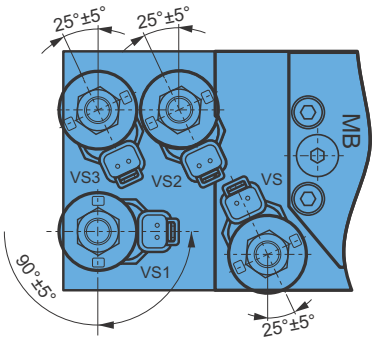

Hirschmann (DIN 43 650)

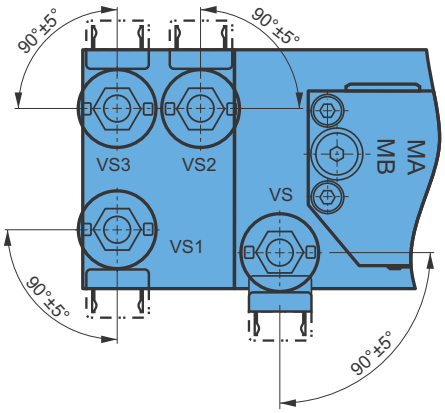

Pump flanged version

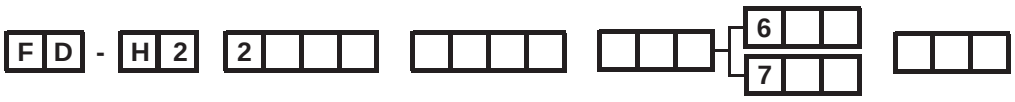

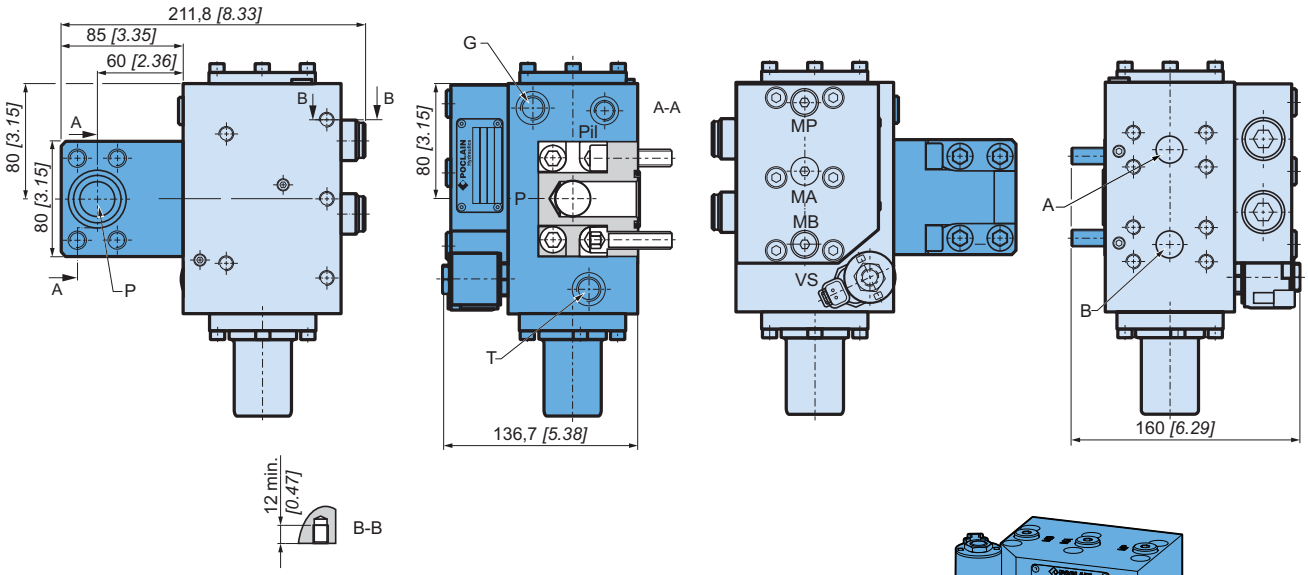

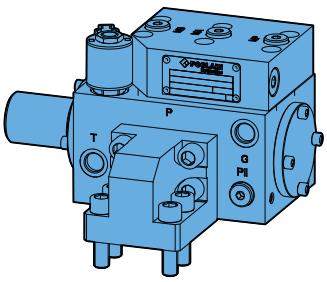

Hydraulic connections

FD-H2-1: up to 200 L/min *[52.8 GPM]* in By-pass

Port	Function	Connections		Max. pressure	Min. pressure
		BSPP ISO 1179-1	UNF ISO 11926-1	Bar *[PSI]*	Bar *[PSI]*
P	Main flow inlet-outlet	G3/4	1” 1/16-12 UNF-2B	500 *[7 252]*	
A	Divided flow outlet - combined flow inllet	G1/2	7/8”-14 UNF-2B	500 *[7 252]*	
B					
G	Charge flow inlet	G3/8	3/4”-16 UNF-2B	50 *[725]*	12 *[174]*
T	Drain	G3/8	3/4”-16 UNF-2B	5 *[72]*	
PIL	Pilot flow inlet (Hydraulic by-pass only)	G1/4	9/16”-18 UNF-2B	50 *[725]*	12 *[174]*
MA	Pressure measurement (A)	G1/4	9/16”-18 UNF-2B	500 *[7 252]*	
MB	Pressure measurement (B)	G1/4	9/16”-18 UNF-2B	500 *[7 252]*	
MP	Pressure measurement (P)	G1/4	9/16”-18 UNF-2B	500 *[7 252]*	

FD-H2-2: up to 300 L/min *[79.3 GPM]* in By-pass

Port	Function	Connections		Max. pressure	Min. pressure
		BSPP ISO 1179-1	UNF ISO 11926-1	Bar *[PSI]*	Bar *[PSI]*
P	Main flow inlet-outlet	DN25 ISO 6162-2	DN25 ISO 6162-2	500 *[7 252]*	
A	Divided flow outlet - combined flow inllet	DN19 ISO 6162-2	DN19 ISO 6162-2	500 *[7 252]*	
B					
G	Charge flow inlet	G3/8	3/4”-16 UNF-2B	50 *[725]*	12 *[174]*
T	Drain	G3/8	3/4”-16 UNF-2B	5 *[72]*	
PIL	Pilot flow inlet (Hydraulic by-pass only)	G1/4	9/16”-18 UNF-2B	50 *[725]*	12 *[174]*
MA	Pressure measurement (A)	G1/4	9/16”-18 UNF-2B	500 *[7 252]*	
MB	Pressure measurement (B)	G1/4	9/16”-18 UNF-2B	500 *[7 252]*	
MP	Pressure measurement (P)	G1/4	9/16”-18 UNF-2B	500 *[7 252]*	

Installation

Mounting position: Indifferent

	Class	(*) N.m *[lb.ft]*
5xM10	8.8	49 *[36]*

(*) As per standard DIN 912

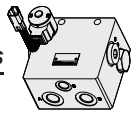

Model code

A	B	C	D	E	F	G
1 2	1 2	1 2 3 4	1 2 3 4	1 2 3	1 2 3	1 2 3
F D	H 2	-	-	-	-	-

Type

Flow	F
Divider/ Combiner	D

Duty

Heavy duty	H

Number of outlets

2 outlets	2

By-pass flow

Up to 200 L/min *[52.8 GPM]*	1
Up to 300 L/min *[79.5 GPM]*	2

Division ratio (flow split %)

50-50	A
70-30 (max. 150 L/min *[39.6 GPM]*)	B
80-20 (max. 125 L/min *[31.7 GPM]*)	C
60-40 (max 175 L/min *[46.2 GPM]*)*	D

* Limited to 150 L/min [39.6 GPM] when by-pass flow is up to 200 L/min *[52.8 GPM]*

Maximum input in dividing mode

50 L/min *[13.2 GPM]*	05
100 L/min *[26.4 GPM]*	10
125 L/min *[33.0 GPM]**	12
150 L/min *[39.6 GPM]*	15
175 L/min *[46.2 GPM]***	17
200 L/min *[52.8 GPM]****	20

* Only when division ratio is 80-20
** Only when division ratio is 60-40
*** When Bypass flow is up to 300l Lmin *[79.3 GPM]*

By-pass control

Electric control	E
Hydraulic control	H

Auxilliaries

Without	0
1 solednoid valve	1
2 solenoid valves	2
3 solenoid valves	3

Transfer restrictor diameter

Without	00
Ø 0,6 mm *[0.024 in]*	06
Ø 0,8 mm *[0.031 in]*	08
Ø 1,0 mm *[0.039 in]*	10
Ø 1,2 mm *[0.047 in]*	12
Ø 1,5 mm *[0.059 in]*	15
Ø 2,0 mm *[0.078 in]*	20

High pressure valve

00	Without
38	380 Bar *[5 511 PSI]*
40	400 Bar *[5 801 PSI]*
42	420 Bar *[6 091 PSI]*

Charge check valves

A	Without*
B	With

* Not available with High pressure valve

Hydraulic connections

A	UNF ports
3	BSPP ports
6	Pump flanged version BSPP ports*
7	Pump flanged version UNF ports*

* Only available for Bypass up to 300 L/min *[79.3 GPM]*

Voltage

A	Without solenoid
1	12 V DC
2	24 V DC

Electric connector

0	Without
1	Naked wires
3	Deutsch DT04
4	Hirschmann (DIN 43 650)

Options

Without	0
By-pass - normally closed	1
Special painting	D
Specific name plate	P
Customized*	F

* Further description on interface drawing

POCLAIN Hydraulics

Poclain Hydraulics reserves the right to make any modifications it deems necessary to the products described in this document without prior notification.The information contained in this document must be confirmed by Poclain Hydraulics before any order is submitted.
Illustrations are not binding.
The Poclain Hydraulics brand is the property of Poclain Hydraulics S.A.

10/07/2017

B33971Z

www.poclain-hydraulics.com