SAUER BIBUS
SUPPORTING YOUR SUCCESS

50.26.0009
50.26.0011

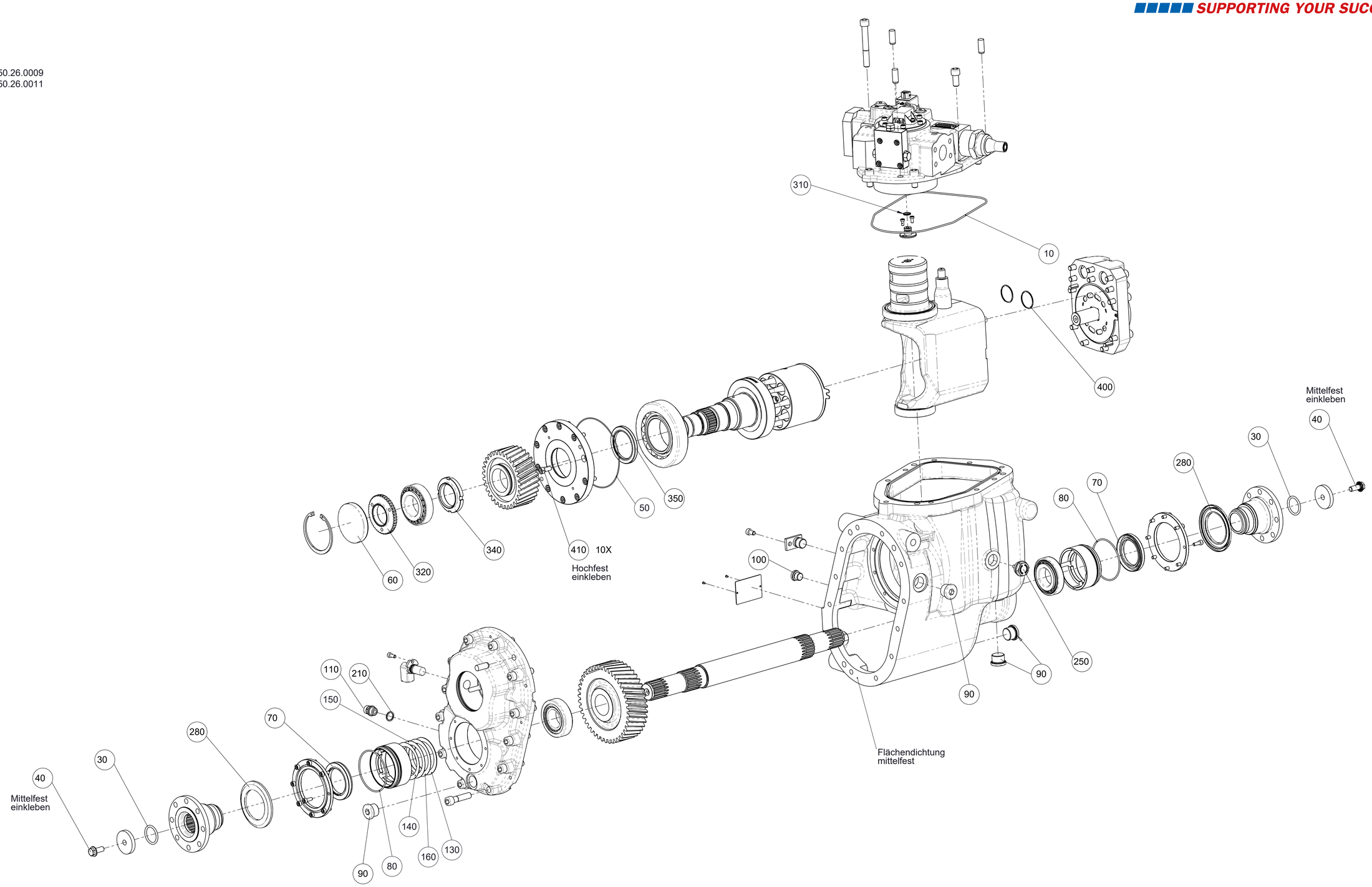

20230517 kie

SAUER BIBUS
SUPPORTING YOUR SUCCESS

50.26.0019
50.26.0024

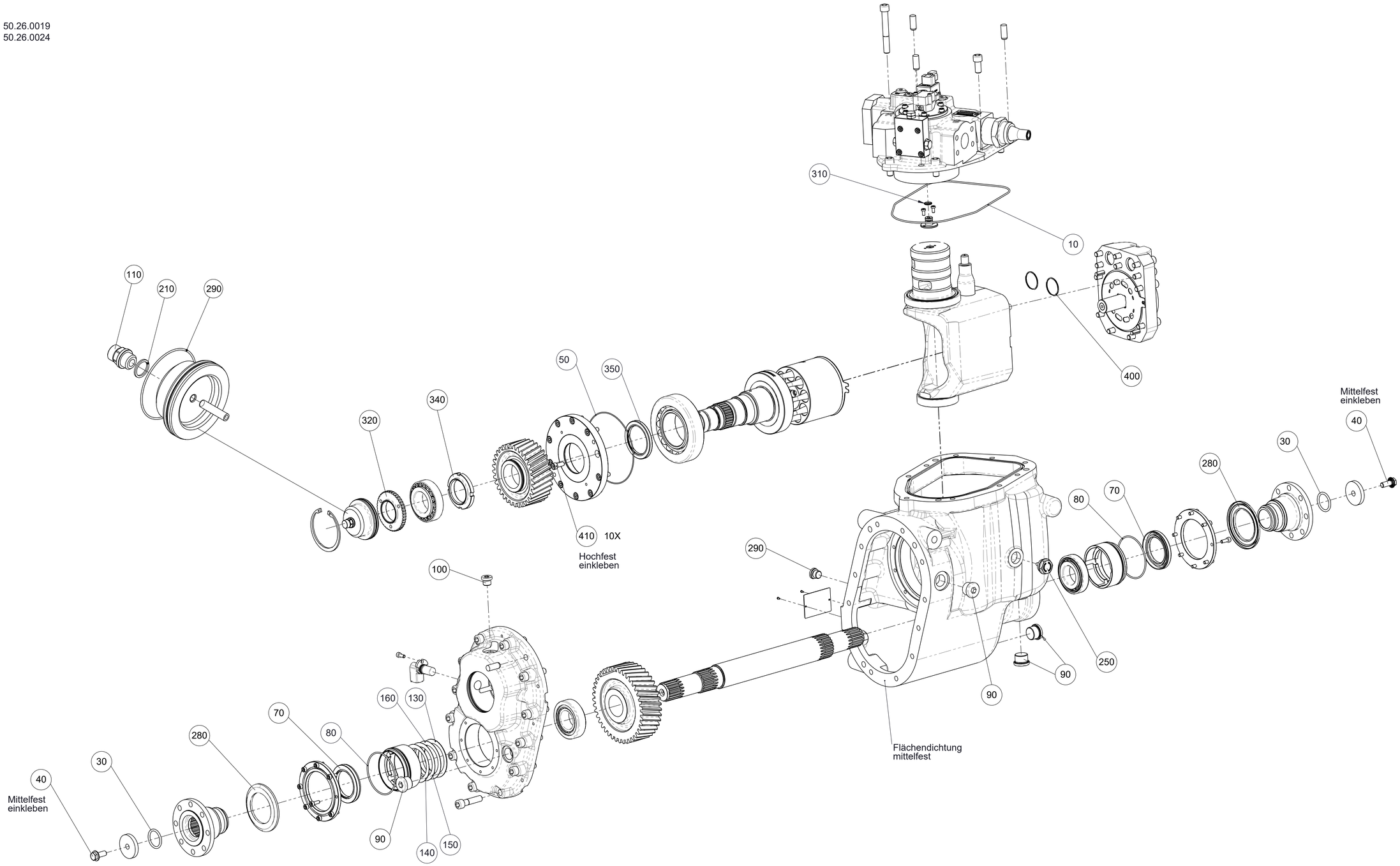

20230517 kie